TECHNICAL MEMORANDUM

TO: Chase Kuffel, City of Kenosha

FROM: Tom Sear, SEH
Bill Kasch, SEH
John Guhl, SEH (Senior Review)

DATE: July 18, 2014

RE: Scope and Effect Calculations
Project #08-1226 Wetland Mitigation Bank
Kenosha Stormwater Utility

Background

Short Elliott Hendrickson (SEH) was contracted by the City of Kenosha to perform scope and effect calculations addressing a subsurface drain tile and ditch system that impacts groundwater hydrology associated with the proposed Kenosha Wetland Mitigation Bank (WMB) Site, located northeast of the Kilbourn Road Ditch and State Highway 50 (75th Street) intersection in Kenosha County. As shown in Exhibit A, this 12.42 acre WMB site contains a 15 inch diameter concrete drain tile on the northern portion of the site that is aligned east to west and discharges to the Kilbourn Road Ditch, which borders the site on the west.

As recommended in an October 3, 2012 letter from the U.S. Army Corps of Engineers (USACE) to the City of Kenosha, the van Schilfgaarde equation (presented in Exhibit B) was applied to determine the lateral effect (L_e) of the drain tile and Kilbourn Road Ditch on the WMB shallow groundwater table. References applied in during the completion of this evaluation are listed at the end of this technical memorandum.

Definitions and Assumptions

Of importance are the parameter definitions and assumptions presented below.

1. L_e is defined as the lateral distance from the drainage system (drain tile or ditch) in which the shallow groundwater elevation drops from an initial height above the centerline of the tile or ditch water surface (m_0) to a final height (m) over a specified time interval (t).
2. For the evaluation described herein, it was assumed the shallow groundwater table elevation was at the ground surface at time zero. The equation does not account for surface ponding. Therefore, m_0 was defined as the distance between the centerline of the tile or ditch water surface and the ground surface.
3. Wetland hydrology is assumed to be present if the shallow groundwater table is one foot or less below the ground surface for 14 days or more during the growing season. This standard is provided in U.S. Army Corps of Engineers Technical Standard for Water-Table Monitoring of Potential Monitoring Sites (Ref. #1: USACE, 2005), which is based on recommendations developed by the National Research Council (Ref. #2: NRC, 1995).

4. Therefore, L_e was determined by defining m as the distance between the centerline of the tile or ditch water surface and a location where the shallow ground water table has an elevation one foot below the ground surface; where t is defined as 14 days. This is consistent with scope and effect calculation procedures given in a Wisconsin supplement to the National Engineering Handbook (Ref. #3: National Resource Conservation Service, 2011).
5. L_e therefore represents the distance from the drainage system where wetland hydrology is not present, since the shallow groundwater table is more than one foot below the ground surface following a 14 day drawdown period.
6. As presented in Exhibit B, S is defined as the spacing between drain tiles. For the purpose of the evaluation documented herein, S is defined as twice Le, or the total width of drawdown impact, including both sides of the drainage system.

Geotechnical Field Investigation

Gestra Engineering, under contract to SEH, collected geotechnical data at the proposed WMB site to obtain parameters values required for input to the van Shilfgaarde equation, as documented in Exhibit C, and summarized below:

1. A 15 foot deep soil boring was completed (located on Exhibit A) to determine the confining soil layer, which was determined to be a lean clay layer at an elevation equal to 665.7 feet.
2. Three shallow (3 feet deep) groundwater monitoring wells (MW), identified as MW-1, MW-2 and MW-3, were installed on-site (located on Exhibit A).[1]
3. Slug tests were performed at each of the three MW's to determine the soil saturated hydraulic conductivity (K) at these locations.
4. 4 foot deep split spoon samples were obtained at each of the three MW's to characterize the soil profile at these locations.
5. Exhibit C provides the geotechnical field and laboratory data developed by Gestra as a result of this field investigation.

The remaining parameters required for the van Shilfgaarde equation were obtained from literature values and survey data provided by the City of Kenosha. Table 1 provides a summary of the soil parameter values and sources used for the evaluations presented herein.

Saturated Hydraulic Conductivities (K Values)

K values measured at the MW's varied considerably across the site. Specifically, K values determined from the slug tests included: MW-1 (7.77×10^{-5} feet/day); MW-2 (0.109 feet/day); and MW-3 (1.67×10^{-3} feet/day). Therefore, the hydraulic conductivity observed at MW-2 is approximately three and two orders of magnitude greater that the values observed at MW-1 and MW-3, respectively. MW-2 was thought to penetrate past a shallow clay confining layer and into a more permeable silty sand layer, which would result in a higher hydraulic conductivity. MW-2 was abandoned and a new monitoring well MW-2a was installed 10 feet to the north at a shallower depth of 30 inches. A slug test was performed at MW-2a but yielded a K value of 2.4 feet /day, an order of magnitude larger than MW-2. Possible explanations for the variability in K

[1] MW-2 was abandoned and reinstalled because it was thought to penetrate a confining shallow clay layer. A new groundwater monitoring well, MW-2a, was installed 10 feet to the north of the former location of MW-2.

values include loose soil, variable soil stratigraphy, animal burrows, root penetration, and freeze-thaw effects. Due to the inconsistency between K values, the slugs test results were not used in the scope and effect calculations.

Saturated hydraulic conductivities were instead calibrated to groundwater level data recorded at the site using the van Schifgaarde equation. Two separate K values were determined for monitoring wells MW-1 and MW-2a. The procedure is summarized below:

1. Initial and final water heights, m_0 and m, were selected from a time interval (t) where groundwater levels were steadily decreasing after a rain event, as illustrated in Exhibit D. To best approximate the scenario evaluated by the scope and effect calculations, m_0 was selected at the time groundwater elevations were at or near ground surface.
2. The distance from the monitoring well to the drain tile or ditch was substituted for Le. It was assumed drawdown at MW-1 is dominated by the Kilbourn Road Ditch, and drawdown at MW-2a is dominated by the drain tile. As such, appropriate values of L_e were assigned based on these assumptions.
3. All remaining parameters, except for K, were obtained from geotechnical data and literature values, as described previously. A summary of used values is provided in Table 2.
4. The van Schilfgaarde equation was solved iteratively for K.

K values at MW-1 and MW-2a were 0.494 feet/day and 0.340 feet/day, respectively. The K value obtained at MW-1 was applied to scope and effect calculations for the Kilbourn Road Ditch in the southern half of the site. The K value obtained at MW-2a was applied to scope and effect calculations for the drain tile and Kilbourn Road Ditch in the northern half of the site.

L_e Calculation Results

L_e calculation results for the drain tile and northern and southern portions of the Kilbourn Road Ditch are presented on Table 2 and illustrated on Exhibit A, which provides a visual depiction of the L_e boundary as related to the various drainage system components.

As shown on Exhibit A:

- The Kilbourn Road Ditch in the northern half of the site and the drain tile have similar values of Le, 144 and 145 feet, respectively.
- In the southern half of the site, the Kilbourn Road Ditch has a larger impact on L_e and wetland hydrology; and L_e is 239 feet due to a higher value of K and because the assumed water surface elevation in the Kilbourn Road Ditch is lower in the southern half of the site.

Conclusions

The following is concluded from the calculations:

1) Under the assumed site conditions and values used in the van Schilfgaarde equation, especially the starting groundwater table level, both the drain tile and Kilbourn Road Ditch impact groundwater hydrology, as illustrated on Exhibit A. Where drawdown of the water table to 1 foot below the ground surface is calculated to occur in 14 days, the areas of impact are approximately 2.8 acres (22.5 percent) and 6.65 acres (53.5 percent) for the drain tile and Kilbourn Road Ditch, respectively. Note that these impact areas

were evaluated separately and overlap. The combined impact area is 8.44 acres (68 percent of the WMB site).

2) It is noted that scope and effect calculations are approximations only, whose accuracy is limited by the availability of field data. The results presented herein should be verified, as appropriate, by the collection of additional wetland hydrology evidence (Ref. #4: USACE, 2010).

3) As noted previously, the van Schilfgaarde equation evaluates the lateral effect assuming the groundwater surface starts at the ground surface at t_0. The equation does not account for the length of time surface water is ponded above the ground surface before t_0. Surface ponding would improve wetland hydrology by increasing the amount of time that the water table is within 1 foot of the ground surface.

LIST OF TABLES

- Table 1: van Schilfgaarde Equation Parameters and Sources
- Table 2: Summary of Scope and Effect Calibration and Calculation Results

LIST OF EXHIBITS

- Exhibit A – Wetland Mitigation Bank Site Map
- Exhibit B – van Schilfgaarde Equation Supplement
- Exhibit C – Geotechnical Reports
- Exhibit D – Groundwater Data Used for K Calibration

REFERENCES

1) U. S. Army Corps of Engineers. Technical Standard for Water-Table Monitoring of Potential Wetland Sites. WRAP Technical Notes Collection. ERDC TNWRAP-05-02. U. S. Army Engineer Research and Development Center. Vicksburg, MS. June 2005.

2) National Research Council. Wetlands: Characteristics and Boundaries. National Academy Press. Washington, D.C. 1995.

3) United States Department of Agriculture - National Resources Conservation Service. Scope and Effect Calculations. Wisconsin Supplement to National Engineering Handbook. Part 650. Engineering Field Handbook. WI 650.1905. January 2011.

4) U.S. Army Corps of Engineers. Regional Supplement to the Corps of Engineers Wetland Delineation Manual: Midwest Region (Version 2.0). ERDC/EL TR-10-16. U. S. Army Engineer Research and Development Center. Vicksburg, MS. August 2010.

5) Minnesota Board of Water and Soil Resources. BWSR Guidance Concerning NRCS-Developed Drainage Setback Tables. Version 1.1. August 2012.

Table 1
van Schilfgaarde Equation Parameter Values and Sources

Variable	Description	Value(s)	Source
f	Drainable Porosity	0.011	Appendix A of Reference #5.
K	Saturated Hydraulic Conductivity	See Table 2	Obtained by calibrating van Schilfgaarde equation with groundwater data . See Table 2 for values used in
m_0	Initial Height of water above the drain	2.35 ft - 3.9 ft	Set to coincide with ground surface elevation per calculation procedure in Reference #3. See Table 2 for elevations used.
m	Height of water table above drain at time t	1.35 ft - 2.9 ft	Set to coincide with one foot below ground surface elevation per wetland hydrologic criteria given in Reference #1 and calculation procedure in Reference #3.
t	Time for water to drop from initial height to drained height	14 days	Wetland hydrologic criteria in Reference #1.
a	Depth from water surface in drain to impermeable layer	10.9 ft - 12.2 ft	Elevation of impermeable layer obtained from boring data. See Exhibit C. Water depth in drain tile was assumed half full. Water surface elevation in ditch obtained by assuming water surface slope is same as channel bottom slope. Channel bottom slope obtained from WDNR HEC-RAS model.
r_e	Effective radius of drain	0.142 ft (drain tile) and 1 ft (ditch)	Table 2 in Reference #5.

Table 2
Summary of Scope and Effect Calibration and Calculation Results

Drainage System	Water Surface Elevation in Tile/Ditch	Effective Radius (re, ft)	Saturated Hydraulic Conductivity (K, ft/day)	Height of Water Surface in Drain Above Confining Layer (a, ft)	Time for water depth to reach m (t, days)	Drainable Porosity (f)	Initial Height of Groundwater Surface Above Drain (m_0, feet)	Final Height of Groundwater Surface Above Drain (m, feet)	Lateral Effect or Distance to Monitoring Well (L_e, ft)
Saturated Hydraulic Conductivity Calibration Calculations									
Drain Tile	677.565	0.142	**0.34**	11.865	3.698	0.011	2.685	1.081	43
Kilbourn Road Ditch (Southern Half of Site)	676.6	1	**0.494**	10.9	3.698	0.011	2.94	2.21	120
Lateral Effect Calculations									
Drain Tile	677.565	0.142	0.34	11.865	14	0.011	2.685	1.685	**145**
Kilbourn Road Ditch (Northern Half of Site)	677.9	1	0.34	12.2	14	0.011	2.35	1.35	**144**
Kilbourn Road Ditch (Southern Half of Site)	676.6	1	0.494	10.9	14	0.011	3.9	2.9	**239**

Bold indicates the value that was solved for with the van Schilfgaarde equation.

CITY DATUM 0.00 = U.S.G.S. 577.42

PHIL SANDER NATURE AREA - WETLAND MITIGATION BANK

LEGEND

- PROPERTY LINE
- EDGE OF WATERCOURSES
- EXISTING WETLAND BOUNDARY
- LIMIT OF EASEMENTS
- 1' CONTOUR - 8/10/2009
- 5' CONTOUR - 8/10/2009
- EXISTING SANITARY SEWER
- EXISTING SANITARY FORCE MAIN
- EXISTING WATER MAIN
- EXISTING NON-WETLAND AREA
- EXISTING WETLAND AREA

Monitoring Well

15 Foot Deep Boring

Le Boundaries

Drain Tile

Kilbourn Road Ditch

N W E S

SCALE 0 40 80 120 FEET

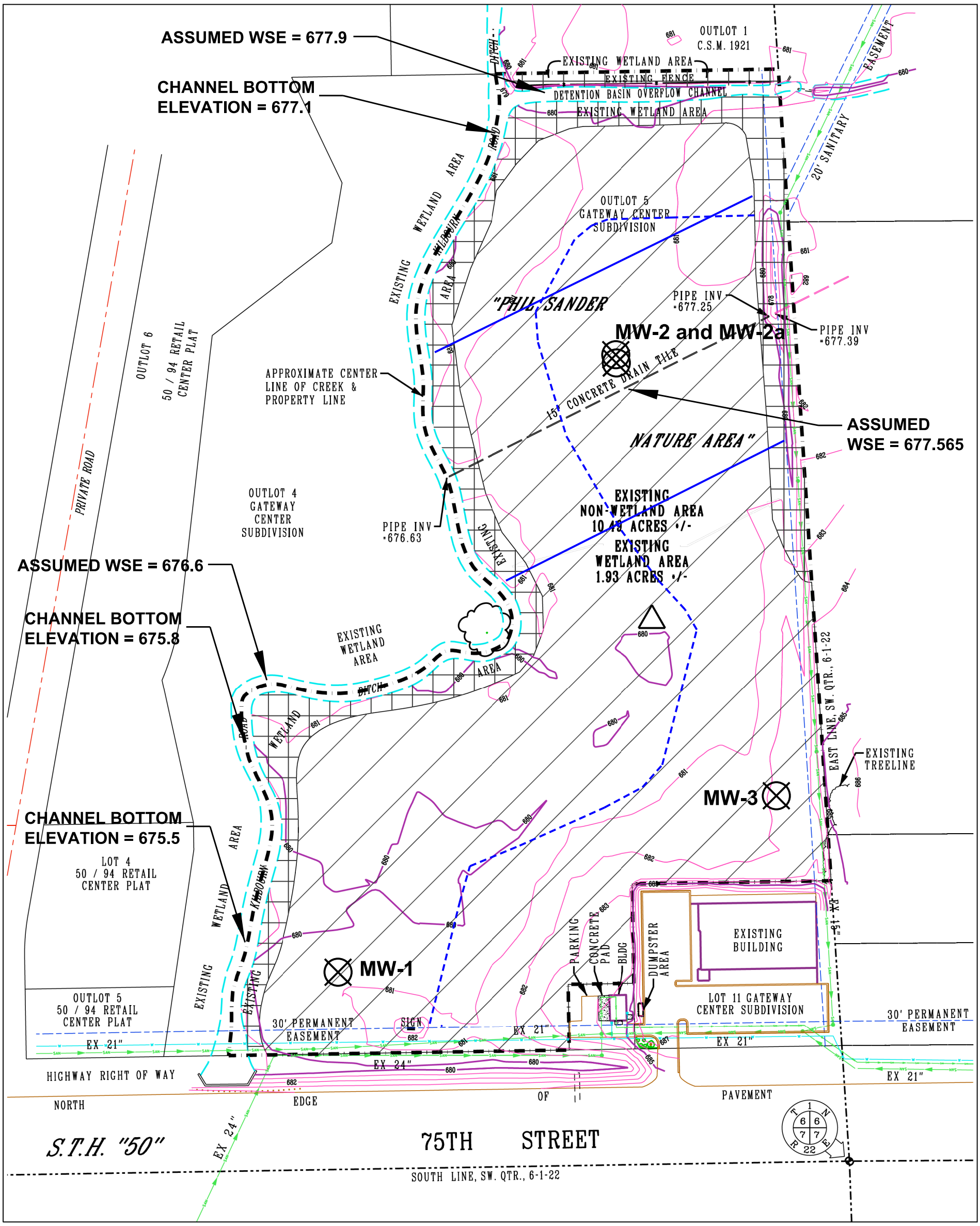

5	REVISIONS	Survey By : RZ Date : 12/2008	CITY OF KENOSHA DEPARTMENT OF PUBLIC WORKS - ENGINEERING 625 52nd ST. Room 302 Kenosha, Wisconsin 53140 ph (262) 653-4150 fax (262) 653-4056	Exhibit A
	8/31/2009 RETOPOGRAPHIC	Design By : RLC Date : 1/2011		
	1/6/2012 DRAFT PLAN II	Drawn By : BJZ Date : 1/2011		JOB NO. 10-1126
		Checked By : SB Date : 1/2011		Sheet No. 5 of 10
		Approved By : MML Date :		

Exhibit B: van Schilfgaard Equation Supplement

The van Schilfgaarde equation is:

$$S = \left[\frac{9Ktd_e}{f'\left[\ln\left(m_0(2d_e + m)\right) - \ln\left(m(2d_e + m_0)\right)\right]}\right]^{0.5}$$

Where:

- L_e (feet) = Lateral effect distance
- S (feet) = drain spacing
- d_e (feet) = equivalent depth from the drain to the impermeable layer
- K (feet/day) = equivalent hydraulic conductivity
- *t* (days) = time for water table to drop from mo to m
- f [(feet/feet), (cm3/cm3), or (cm/cm)] = drainable porosity of the water conducting soil expressed as a fraction (voids drained at 60 cm tension)
- f ’ = drainable porosity adjusted for surface roughness = (f + s/12)
- s (inches) = water trapped on the soil surface by soil roughness
- m_o (feet) = initial height of water table (m) above centerline of tile or ditch water surface
- m (feet) = height of water table at the midpoint between the drains (or L_e distance) above the centerline of tile (or water surface in ditch), after time t
- r_e (feet) = effective radius of drain

$d_e = \frac{a}{1+\frac{a}{S'}\left[\frac{8}{\pi}\ln\frac{a}{r_e} - 3.4\right]}$ for a/S’ < 0.3 or $d_e = \frac{S'\pi}{8\left[\ln\frac{S'}{r_e} - 1.15\right]}$ for a/S’ > 0.3

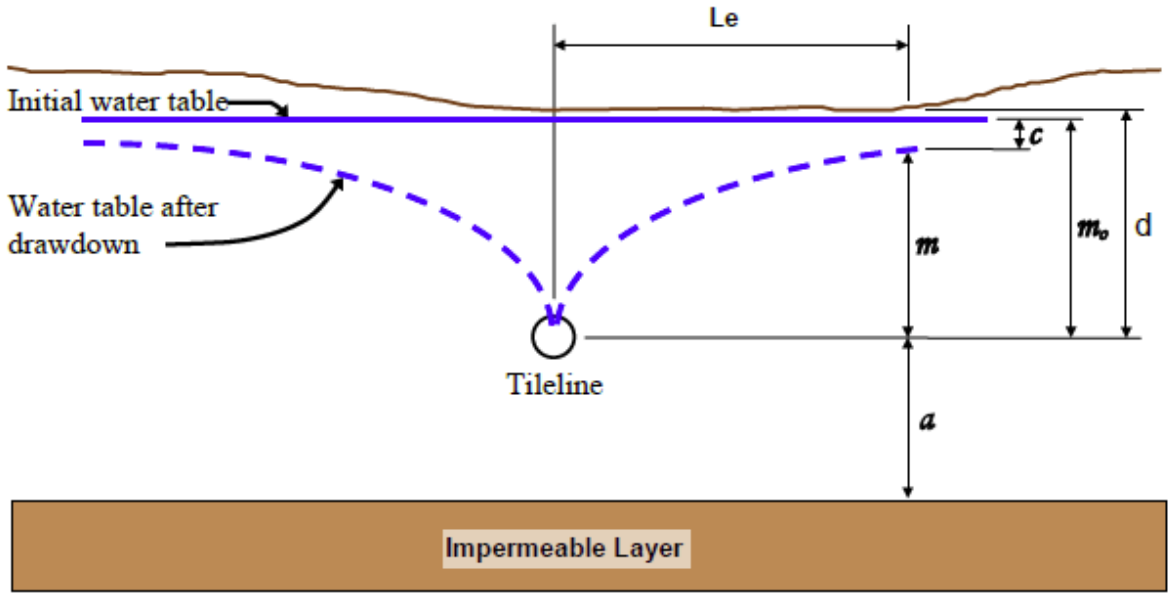

Figure 5: Variables for van Schilfgaarde Equation for Tile Drainage System

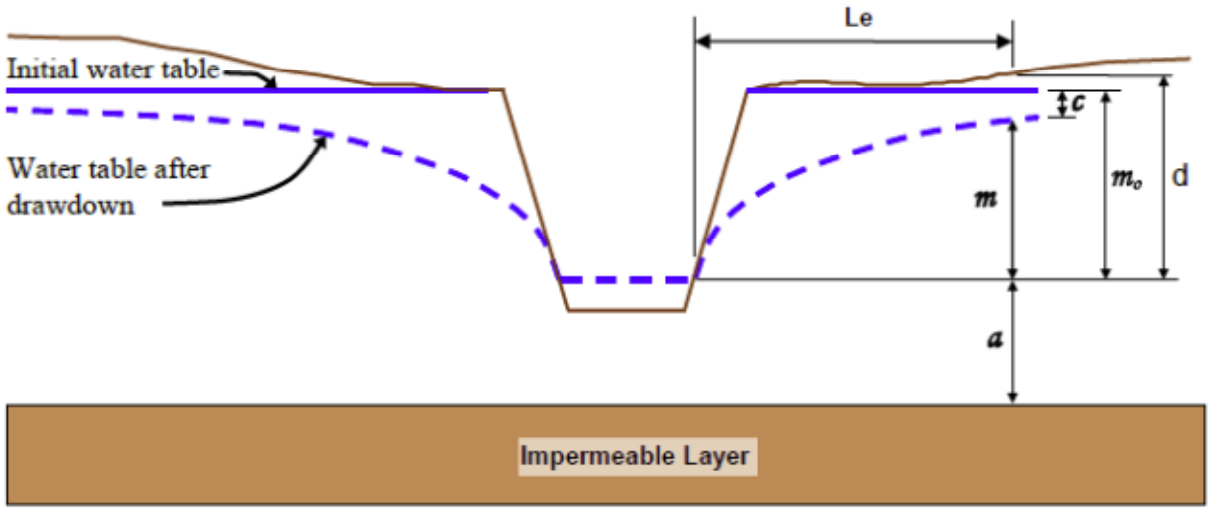

Figure 6: Variables for van Schilfgaarde Equation for Ditch Drainage System

(Ref. #3: National Resource Conservation Service, 2011)

Exhibit C: Geotechnical Report

GESTRA Engineering, Inc.
1626 W. Fond Du Lac Avenue
Milwaukee, WI 53205
Phone: (414) 933-7444
Fax: (414) 933-7840

November 19, 2013

Tom Sear
Short Elliot Hendrickson Inc.
5395 North 118th Court
Milwaukee, Wisconsin 53225

Subject: On-Site Evaluation Report
Project #08-1226_Wetland Mitigation Bank Groundwater Monitoring and Evaluation
Kenosha, Wisconsin

Dear Mr. Sear:

GESTRA Engineering Inc. (GESTRA) has teamed with Short Elliot Hendrickson Inc. (SEH) on the above referenced Kenosha Stormwater Utility project to provide shallow groundwater monitoring and evaluation services for a 13 acre site located adjacent to the Kilbourn Road Ditch in Kenosha, Wisconsin. The project's purpose is to evaluate the hydrologic impact of disabling the on-site drain tile system and monitor groundwater elevation data in three shallow groundwater monitoring wells for one growing season. This report presents the findings of the field work involving the installation one 15 feet deep soil boring, installation of three shallow wells and performance assessment of the three groundwater monitoring wells.

Soil Borings:

GESTRA completed one 15-foot deep soil boring (B-1) on 10/11/13 using a Dietrich D-50 ATV drill rig. The location of B-1 is shown in Figure 1. Samples were collected continuously using a 24-inch split spoon sampler. The boring log is presented in Attachment 1.

Monitoring Wells

Three 1.25-inch diameter shallow monitoring wells were installed on 10/11/13. Figure 1 shows the location of the monitoring wells. The wells were installed using a 2.25-inch inside diameter hollow stem auger. Split spoon samples were collected from 0 to 2 feet and 2 to 4 feet at each well location to classify soils. The borings were drilled to 41-

inches below ground surface (bgs) for installation of the wells. The augers created a borehole diameter of 5-inches.

The monitoring wells were constructed of schedule 80 PVC, with 31-inches of 0.010-inch slotted screen. The wells were set within the drilled boreholes to a depth of 36-inches bgs. The borehole was backfilled with sand from 41-inches to the bottom of the well screen. The boring logs and well construction forms are included in Attachment 2.

Well Development

The three monitoring wells were developed on 10/22/13. Well development forms are included in Attachment 3.

Well Performance Assessment

Hydraulic conductivity testing was completed on the groundwater monitoring wells on 11/01/13. Testing was completed using a 500 ml slug. Hydraulic conductivity was calculated using Hvorslev's equation. Results of the slug tests determined the following estimated hydraulic conductivities (K):

- MW-1: Hydraulic conductivity of 2.74E-08 cm/sec;
- MW-2: Hydraulic conductivity of 3.84E-05 cm/sec; and
- MW-3: Hydraulic conductivity of 5.91E-07 cm/sec.

Slug Test reports are included in Attachment 4.

Laboratory Testing

Limited laboratory testing was completed on samples collected in boring B-1 for soil classification purposes. A cohesive sample collected at 2.5 to 3 feet was tested for Atterberg Limits. A granular sample from 6.5 to 7 feet was tested for grain size. Test reports are included in Attachment 5 and results are shown on the B-1 boring log.

Additional Site Characterization

Per the Army Corps of Engineers publication Technical Standard for Water-Table Monitoring of Potential Wetland Sites (ERDC-TN-WRAP-05-2, June 2005), soil profile descriptions of the three monitoring well locations (Appendix A) and monitoring well installation data forms (Appendix B) were completed and are included in Attachment 6.

Survey/Groundwater Elevations

The City of Kenosha surveyed and staked the boring locations prior to drilling. The borings and wells were completed at the staked locations. Groundwater elevation data was collected on 10/22 and 11/01/13. Table 1 shows survey information and groundwater elevation data collected at the site.

If you have any questions concerning this report, please contact us at 414-933-7444.

Sincerely,

GESTRA Engineering, Inc.

Report Prepared By:

Scott Miller
Drilling Coordinator

Report Reviewed By:

Douglas Bath, P.E.
Project Manager

PHIL SANDER NATURE AREA - WETLAND MITIGATION BANK

Figure 1

Well Location

Boring Location

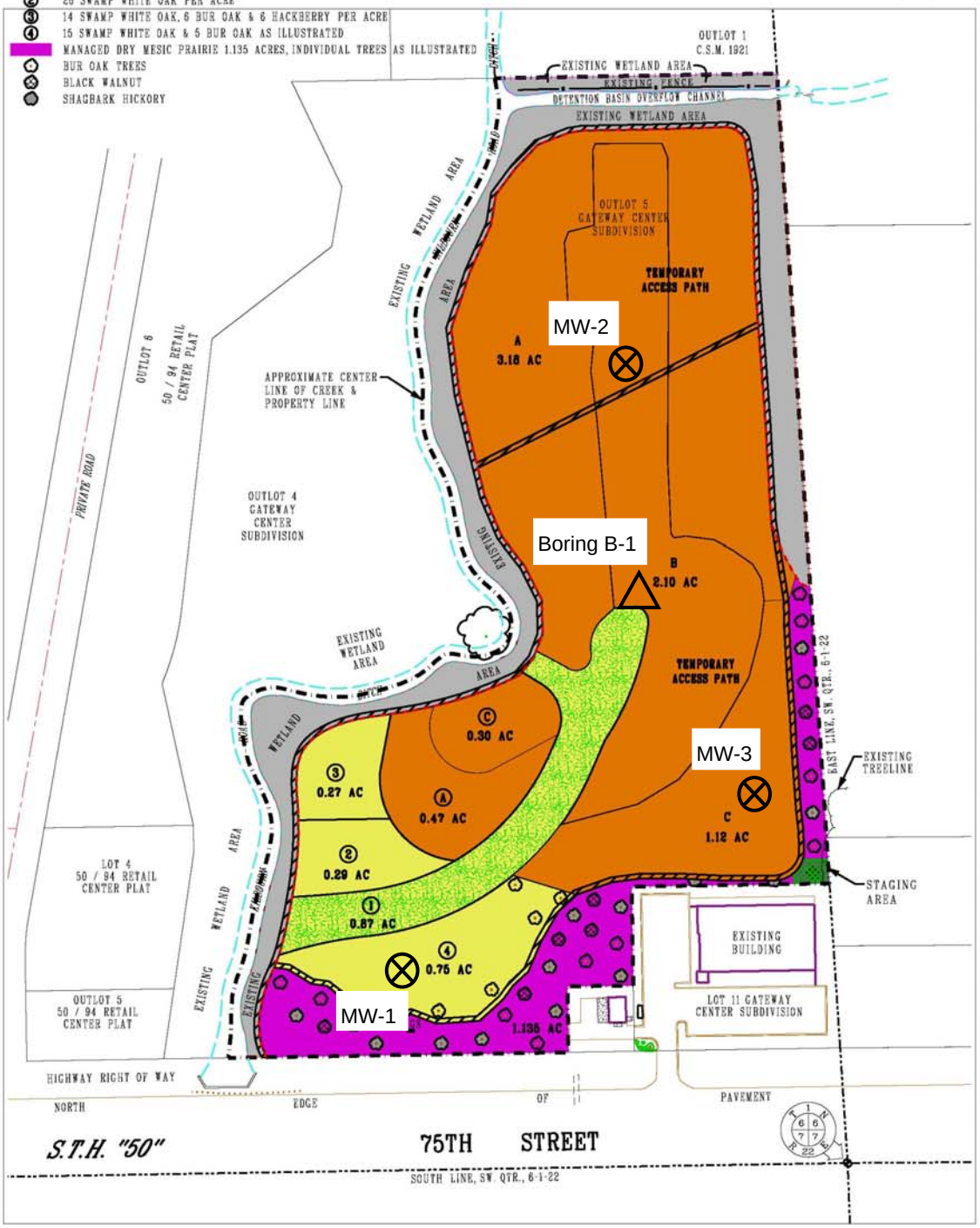

9	REVISIONS	Survey By : RZ Date : 12/2010	CITY OF KENOSHA DEPARTMENT OF PUBLIC WORKS - ENGINEERING 625 52nd St. Room 302 Kenosha, Wisconsin 53140 ph (262) 653-450 fax (262) 653-4056	PHIL SANDER NATURE AREA PROPOSED MANAGED PLANT COMMUNITIES
	1/6/2012 DRAFT PLAN II	Design By : RLC Date : 12/2010		
		Drawn By : BJZ Date : 12/2010		
		Checked By : KJR Date : 12/2010		JOB NO. 10-1126
		Approved By : MML Date :		Sheet No. 9 of 10

Table 1

Summary of Survey Information and Groundwater Elevation Monitoring

Project #08-1226_Wetland Mitigation Bank Groundwater Monitoring and Evaluation

Well No.	Northing	Easting	Ground Elevation (ft, MSL)	Top of Well Casing Elevation (ft, MSL)*	Depth to Water from Top of Casing_10/22/13	Groundwater Elevation_10/22/13 (ft, MSL)	Depth to Water from Top of Casing_11/01/13	Groundwater Elevation_11/01/13 (ft, MSL)
Boring B-1	214269.6	2553746	679.97					
MW-1	213815.5	2553458	680.64	683.4	5.31	678.1	5.63	677.8
MW-2	214552.7	2553729	680.24	682.9	4.30	678.6	4.25	678.7
MW-3	214030	2553886	681.34	684.2	5.68	678.5	5.80	678.4

* Top of casing elevation determined in field by measuring from ground surface to top of casing

Note: Boring and well survey information provided by others

Attachment 1

B-1 Boring Log

SOIL BORING LOG

GESTRA
Gestra Engineering Inc.
1626 W. Fond du Lac Avenue
Milwaukee, WI 53205
Phone: 414-933-7444, Fax: 414-933-7844

PROJECT NAME	Kenosha Wetland Mitigation Bank
DATE DRILLING STARTED	10/11/2013
PROJECT LOCATION	Kenosha, WI
DATE DRILLING ENDED	10/11/2013
BORING NUMBER	B-1
PROJECT NUMBER	13091-10
DRILLING RIG	D-50 ATV
BORING DRILLED BY	FIRM: Gestra CREW CHIEF: B. Sargent
FIELD LOG	B. Sargent
LAB LOG / QC	D. Born
NORTHING	214270
EASTING	2553746
DRILLING METHOD	2 1/4" ID HSA
SURFACE ELEVATION	680 ft

Number and Type	Recovery (in)	Blow Counts	N - Value	Depth (ft)	Elevation	Soil Description and Geological Origin for Each Major Unit	USCS Classification	Graphic	Well Diagram	Unconfined Comp. Strength (Q_u or Q_p) (tsf)	Liquid Limit	Plasticity Index	Moisture Content (%)	Comments
SS - 1	21	2 3 5 3	8			TOPSOIL, black clay, moist, with organics (roots) 1 (679)								
						LEAN CLAY, olive, moist, stiff, with organics (roots) 2 (678)	CL			1.5				
SS - 2	22	2 2 3 2	5			LEAN CLAY, dark brown, moist, medium stiff to stiff 2.5 (677.5)	CL							
						LEAN CLAY, brown mottled gray, moist, medium stiff to soft	CL			1.0	44	26		
SS - 3	2	0 0 1 3	1	5	675.0	5 (675)								Poor recovery in sample SS-3
						SILTY SAND, brown, wet, loose, trace gravel	SM							
SS - 4	24	3 4 5 9	9			7 (673)								Gravel = 13.8% Sand = 55.8% P200 =30.4%
						SANDY CLAY, gray, moist, medium stiff to stiff 7.5 (672.5)	CL			1.0				
SS - 5	20	4 7 9 11	16			CLAYEY SAND, gray, wet, medium dense, trace gravel 9 (671)	SC							
				10	670.0	CLAYEY SAND with GRAVEL, gray, wet, medium dense	SC							
SS - 6	17	4 11 15 15	26			12.5 (667.5)								
SS - 7	20	16 14 20 18	34			SILTY SAND, gray, wet, dense, with clay seams 13 (667)	SM			1.0				
						GRAVEL with SILT and SAND, gray, wet, dense, with clay seams 14.3 (665.7)	GW-GM							
SS - 8	16	16 5 5 50	10	15	665.0	LEAN CLAY, gray, moist, stiff 15.4 (664.6)	CL			1.25				
						Fractured rock in spoon tip at 15.8 ft. End of Boring at 15.8 ft.								
				20	660.0									
				25	655.0									
				30	650.0									

WATER & CAVE-IN OBSERVATION DATA

WATER ENCOUNTERED DURING DRILLING: 6 ft.		CAVE DEPTH AT COMPLETION: NMR	WET ☐ DRY ☐
WATER LEVEL AT COMPLETION: 3.4 ft.		CAVE DEPTH AFTER 0 HOURS: NMR	WET ☐ DRY ☐
WATER LEVEL AFTER NMR HOURS: NMR		NE = Not Encountered; NMR = No Measurement Recorded	

NOTE: Stratification lines between soil types represent the approximate boundary; gradual transition between in-situ soil layers should be expected.

Attachment 2

Monitoring Well Boring Logs and Well Construction Forms

SOIL BORING LOG

Gestra Engineering Inc.
1626 W. Fond du Lac Avenue
Milwaukee, WI 53205
Phone: 414-933-7444, Fax: 414-933-7844

PROJECT NAME	Kenosha Wetland Mitigation Bank
DATE DRILLING STARTED	10/11/2013
PROJECT LOCATION	Kenosha, WI
DATE DRILLING ENDED	10/11/2013
BORING NUMBER	**MW-1**
PROJECT NUMBER	13091-10
DRILLING RIG	D-50 ATV
BORING DRILLED BY	FIRM: Gestra CREW CHIEF: B. Sargent
FIELD LOG	B. Sargent
LAB LOG / QC	D. Born
NORTHING	213815
EASTING	2553458
DRILLING METHOD	2 1/4" ID HSA
SURFACE ELEVATION	680.6 ft

Number and Type	Recovery (in)	Blow Counts	N - Value	Depth (ft)	Elevation	Soil Description and Geological Origin for Each Major Unit	USCS Classification	Graphic	Well Diagram	Unconfined Comp. Strength (Q_u or Q_p) (tsf)	Liquid Limit	Plasticity Index	Moisture Content (%)	Comments
SS - 1	16	2 2 3 4	5			TOPSOIL, black clay, moist, with organics (roots) 1.4 (679.2)				1.75				
						LEAN CLAY, black, moist, stiff, trace organics 3 (677.6)	CL							
SS - 2	18	3 4 5 6	9			LEAN CLAY, brown mottled with gray, moist, stiff 4 (676.6)	CL			1.25				
						End of Boring at 4.0 ft.								
				5	675.6									
				10	670.6									
				15	665.6									
				20	660.6									
				25	655.6									
				30	650.6									

WATER & CAVE-IN OBSERVATION DATA

WATER ENCOUNTERED DURING DRILLING: NE		CAVE DEPTH AT COMPLETION: NMR	WET ☐ DRY ☐
WATER LEVEL AT COMPLETION: NE		CAVE DEPTH AFTER 0 HOURS: N/A	WET ☐ DRY ☐
WATER LEVEL AFTER NMR HOURS: NMR		NE = Not Encountered; NMR = No Measurement Recorded	

NOTE: Stratification lines between soil types represent the approximate boundary; gradual transition between in-situ soil layers should be expected.

13091-10

State of Wisconsin
Department of Natural Resources

Route to: Watershed/Wastewater ☐ Waste Management ☐ Remediation/Redevelopment ☐ Other ☐ _____

MONITORING WELL CONSTRUCTION
Form 4400-113A Rev. 7-98

Facility/Project Name: Kenosha Wetland	Local Grid Location of Well: _____ ft. ☐ N. ☐ S. _____ ft. ☐ E. ☐ W.	Well Name: MW-1
Facility License, Permit or Monitoring No.: Mitigation Bank	Local Grid Origin ☐ (estimated: ☐) or Well Location ☐ Lat. ___ ° ___ ' ___ " Long. ___ ° ___ ' ___ " or	Wis. Unique Well No.: _____ / DNR Well ID No.: _____
Facility ID: _____	St. Plane _____ ft. N, _____ ft. E. S/C/N	Date Well Installed: 10/11/2013 (m m d d y y y y)
Type of Well: Well Code ___/___	Section Location of Waste/Source: ___ 1/4 of ___ 1/4 of Sec. ___, T. ___ N, R. ___ ☐ E ☐ W	Well Installed By: Name (first, last) and Firm: Bryan Sargent, GESTRA Engineering
Distance from Waste/Source ___ ft. / Enf. Stds. Apply ☐	Location of Well Relative to Waste/Source: u ☐ Upgradient s ☐ Sidegradient d ☐ Downgradient n ☐ Not Known	Gov. Lot Number: _____

A. Protective pipe, top elevation _____ ft. MSL

B. Well casing, top elevation 683.4 ft. MSL

C. Land surface elevation 680.6 ft. MSL

D. Surface seal, bottom _____ ft. MSL or _____ ft.

12. USCS classification of soil near screen:
GP ☐ GM ☐ GC ☐ GW ☐ SW ☐ SP ☐
SM ☐ SC ☐ ML ☐ MH ☐ CL ☒ CH ☐
Bedrock ☐

13. Sieve analysis performed? ☐ Yes ☒ No

14. Drilling method used: Rotary ☐ 50 Hollow Stem Auger ☒ 41 Other ☐ _____

15. Drilling fluid used: Water ☐ 02 Air ☐ 01 Drilling Mud ☐ 03 None ☒ 99

16. Drilling additives used? ☐ Yes ☒ No

Describe _____

17. Source of water (attach analysis, if required): _____

E. Bentonite seal, top _____ ft. MSL or 0 ft.

F. Fine sand, top _____ ft. MSL or — ft.

G. Filter pack, top _____ ft. MSL or 4 in ft.

H. Screen joint, top _____ ft. MSL or 5 in ft.

I. Well bottom _____ ft. MSL or 36 in ft.

J. Filter pack, bottom _____ ft. MSL or 41 in ft.

K. Borehole, bottom _____ ft. MSL or 41 in ft.

L. Borehole, diameter 5 in.

M. O.D. well casing 1 5/8 in.

N. I.D. well casing 1 1/4 in.

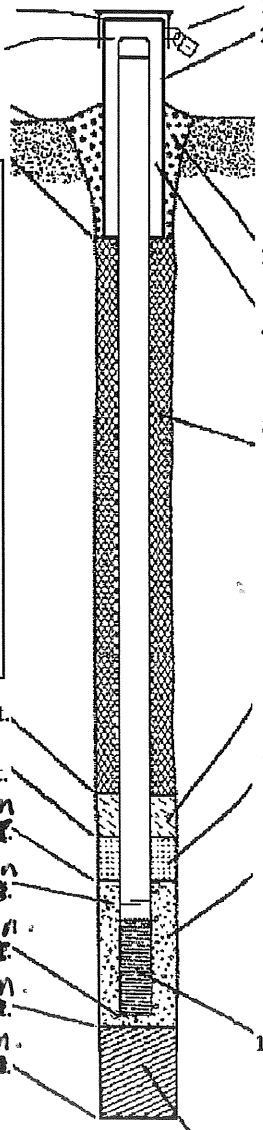

1. Cap and lock? ☒ Yes ☐ No

2. Protective cover pipe:
a. Inside diameter: ___ in.
b. Length: ___ ft.
c. Material: Steel ☐ 04 Other ☐ _____
d. Additional protection? ☐ Yes ☐ No
If yes, describe: _____

3. Surface seal: Bentonite ☒ 30 Concrete ☐ 01 Other ☐ _____

4. Material between well casing and protective pipe: N/A
Bentonite ☐ 30 Other ☐ _____

5. Annular space seal: a. Granular/Chipped Bentonite ☒ 33
b. ___ Lbs/gal mud weight . . . Bentonite-sand slurry ☐ 35
c. ___ Lbs/gal mud weight . . . . . Bentonite slurry ☐ 31
d. ___ % Bentonite . . . . . Bentonite-cement grout ☐ 50
e. ___ Ft^3 volume added for any of the above
f. How installed: Tremie ☐ 01 Tremie pumped ☐ 02 Gravity ☒ 08

6. Bentonite seal: a. Bentonite granules ☐ 33
b. ☐ 1/4 in. ☒ 3/8 in. ☐ 1/2 in. Bentonite chips ☒ 32
c. _____ Other ☐ _____

7. Fine sand material: Manufacturer, product name & mesh size
a. — _____
b. Volume added _____ ft^3

8. Filter pack material: Manufacturer, product name & mesh size
a. R.W. Sidley #10-20
b. Volume added _____ ft^3

9. Well casing: Flush threaded PVC schedule 40 ☐ 23 Flush threaded PVC schedule 80 ☒ 24 Other ☐ _____

10. Screen material: Sch 80 PVC
a. Screen type: Factory cut ☒ 11 Continuous slot ☐ 01 Other ☐ _____
b. Manufacturer Monoflex
c. Slot size: 0.010 in.
d. Slotted length: 31 in.

11. Backfill material (below filter pack): None ☒ 14 Other ☐ _____

I hereby certify that the information on this form is true and correct to the best of my knowledge.

Signature	Firm
Scott Miller	GESTRA Engineering, Inc

Please complete both Forms 4400-113A and 4400-113B and return them to the appropriate DNR office and bureau. Completion of these reports is required by chs. 160, 281, 283, 289, 291, 292, 293, 295, and 299, Wis. Stats., and ch. NR 141, Wis. Adm. Code. In accordance with chs. 281, 289, 291, 292, 293, 295, and 299, Wis. Stats., failure to file these forms may result in a forfeiture of between $10 and $25,000, or imprisonment for up to one year, depending on the program and conduct involved. Personally identifiable information on these forms is not intended to be used for any other purpose. NOTE: See the instructions for more information, including where the completed forms should be sent.

GESTRA
Gestra Engineering Inc.
1626 W. Fond du Lac Avenue
Milwaukee, WI 53205
Phone: 414-933-7444, Fax: 414-933-7844

SOIL BORING LOG

PROJECT NAME: Kenosha Wetland Mitigation Bank	DATE DRILLING STARTED: 10/11/2013	BORING NUMBER: MW-2	
PROJECT LOCATION: Kenosha, WI	DATE DRILLING ENDED: 10/11/2013	PROJECT NUMBER: 13091-10	
		DRILLING RIG: D-50 ATV	
BORING DRILLED BY: FIRM: Gestra, CREW CHIEF: B. Sargent	FIELD LOG: B. Sargent	NORTHING: 214553	DRILLING METHOD: 2 1/4" ID HSA
	LAB LOG / QC: D. Born	EASTING: 2553729	SURFACE ELEVATION: 680.2 ft

Number and Type	Recovery (in)	Blow Counts	N - Value	Depth (ft)	Elevation	Soil Description and Geological Origin for Each Major Unit	USCS Classification	Graphic	Well Diagram	Unconfined Comp. Strength (Q_u or Q_p) (tsf)	Liquid Limit	Plasticity Index	Moisture Content (%)	Comments
SS - 1	14	2 3 5 6	8			TOPSOIL, clay, black, moist, with organics (roots) 1 (679.2)								
						LEAN CLAY, black, moist, stiff, with organics 3 (677.2)	CL			1.25				
SS - 2	11	1 3 2 1	5			CLAYEY SAND, brown with gray, very moist, loose 4 (676.2)	SC			0.75				
						End of Boring at 4.0 ft.								
				5	675.2									
				10	670.2									
				15	665.2									
				20	660.2									
				25	655.2									
				30	650.2									

WATER & CAVE-IN OBSERVATION DATA

WATER ENCOUNTERED DURING DRILLING: 3.5 ft.		CAVE DEPTH AT COMPLETION: NMR	WET ☐ DRY ☐
WATER LEVEL AT COMPLETION: NMR		CAVE DEPTH AFTER 0 HOURS: N/A	WET ☐ DRY ☐
WATER LEVEL AFTER NMR HOURS: NMR		NE = Not Encountered; NMR = No Measurement Recorded	

NOTE: Stratification lines between soil types represent the approximate boundary; gradual transition between in-situ soil layers should be expected.

13091-10

State of Wisconsin
Department of Natural Resources

Route to: Watershed/Wastewater ☐ Waste Management ☐ Remediation/Redevelopment ☐ Other ☐ _____

MONITORING WELL CONSTRUCTION
Form 4400-113A Rev. 7-98

Facility/Project Name: Kenosha Wetland	Local Grid Location of Well: _____ ft. ☐ N. ☐ S. _____ ft. ☐ E. ☐ W.	Well Name: MW-2
Facility License, Permit or Monitoring No.: Mitigation Bank	Local Grid Origin ☐ (estimated: ☐) or Well Location ☐ Lat. ___° ___' ___" Long. ___° ___' ___" or	Wis. Unique Well No.: _____ / DNR Well ID No.: _____
Facility ID: _____	St. Plane _____ ft. N, _____ ft. E. S/C/N	Date Well Installed: 10/11/2013 (m m d d y y y y)
Type of Well: Well Code ____/____	Section Location of Waste/Source: ____1/4 of ____ 1/4 of Sec. ____, T. ____ N, R. ____ ☐ E ☐ W	Well Installed By: Name (first, last) and Firm: Bryan Sargent, GESTRA Engineering
Distance from Waste/Source _____ ft. Enf. Stds. Apply ☐	Location of Well Relative to Waste/Source: u ☐ Upgradient s ☐ Sidegradient d ☐ Downgradient n ☐ Not Known; Gov. Lot Number: _____	

A. Protective pipe, top elevation _____ ft. MSL

B. Well casing, top elevation 682.9 ft. MSL

C. Land surface elevation 680.2 ft. MSL

D. Surface seal, bottom _____ ft. MSL or _____ ft.

12. USCS classification of soil near screen:
GP ☐ GM ☐ GC ☐ GW ☐ SW ☐ SP ☐
SM ☐ SC ☐ ML ☐ MH ☐ CL ☒ CH ☐
Bedrock ☐

13. Sieve analysis performed? ☐ Yes ☒ No

14. Drilling method used: Rotary ☐ 50; Hollow Stem Auger ☒ 41; Other ☐ _____

15. Drilling fluid used: Water ☐ 02; Air ☐ 01; Drilling Mud ☐ 03; None ☒ 99

16. Drilling additives used? ☐ Yes ☒ No

Describe _____

17. Source of water (attach analysis, if required): _____

E. Bentonite seal, top _____ ft. MSL or 0 ft.

F. Fine sand, top _____ ft. MSL or — ft.

G. Filter pack, top _____ ft. MSL or 4 in ft.

H. Screen joint, top _____ ft. MSL or 5 in ft.

I. Well bottom _____ ft. MSL or 36 in ft.

J. Filter pack, bottom _____ ft. MSL or 41 in ft.

K. Borehole, bottom _____ ft. MSL or 41 in ft.

L. Borehole, diameter 5 in.

M. O.D. well casing 1 5/8 in.

N. I.D. well casing 1 1/4 in.

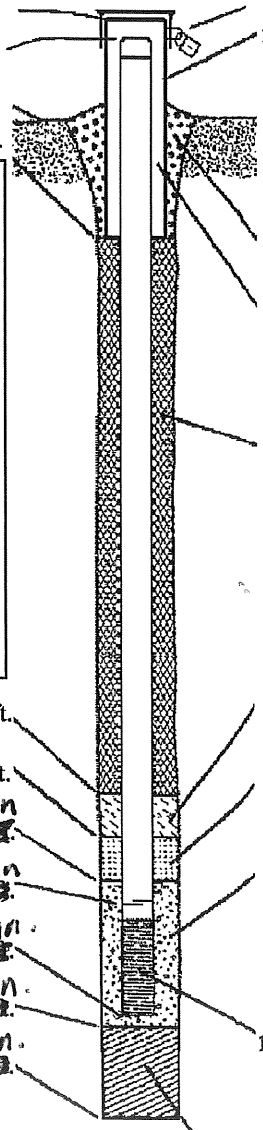

1. Cap and lock? ☒ Yes ☐ No

2. Protective cover pipe:
a. Inside diameter: ___ in.
b. Length: ___ ft.
c. Material: _____ Steel ☐ 04; Other ☐
d. Additional protection? ☐ Yes ☐ No
If yes, describe: _____

3. Surface seal: _____ Bentonite ☒ 30; Concrete ☐ 01; Other ☐

4. Material between well casing and protective pipe: N/A Bentonite ☐ 30; Other ☐

5. Annular space seal: a. Granular/Chipped Bentonite ☒ 33
b. ____ Lbs/gal mud weight . . . Bentonite-sand slurry ☐ 35
c. ____ Lbs/gal mud weight . . . . . Bentonite slurry ☐ 31
d. ____ % Bentonite . . . . . Bentonite-cement grout ☐ 50
e. _____ Ft^3 volume added for any of the above
f. How installed: Tremie ☐ 01; Tremie pumped ☐ 02; Gravity ☒ 08

6. Bentonite seal: a. Bentonite granules ☐ 33
b. ☐ 1/4 in. ☒ 3/8 in. ☐ 1/2 in. Bentonite chips ☒ 32
c. _____ Other ☐

7. Fine sand material: Manufacturer, product name & mesh size
a. _____
b. Volume added _____ ft^3

8. Filter pack material: Manufacturer, product name & mesh size
a. R.W. Sidley #10-20
b. Volume added _____ ft^3

9. Well casing: Flush threaded PVC schedule 40 ☐ 23; Flush threaded PVC schedule 80 ☒ 24; Other ☐ _____

10. Screen material: Sch 80 PVC
a. Screen type: Factory cut ☒ 11; Continuous slot ☐ 01; Other ☐ _____
b. Manufacturer Monoflex
c. Slot size: 0.010 in.
d. Slotted length: 31 in.

11. Backfill material (below filter pack): None ☒ 14; Other ☐ _____

I hereby certify that the information on this form is true and correct to the best of my knowledge.

Signature	Firm
Scott Muller	GESTRA Engineering, Inc.

Please complete both Forms 4400-113A and 4400-113B and return them to the appropriate DNR office and bureau. Completion of these reports is required by chs. 160, 281, 283, 289, 291, 292, 293, 295, and 299, Wis. Stats., and ch. NR 141, Wis. Adm. Code. In accordance with chs. 281, 289, 291, 292, 293, 295, and 299, Wis. Stats., failure to file these forms may result in a forfeiture of between $10 and $25,000, or imprisonment for up to one year, depending on the program and conduct involved. Personally identifiable information on these forms is not intended to be used for any other purpose. NOTE: See the instructions for more information, including where the completed forms should be sent.

SOIL BORING LOG

Gestra Engineering Inc.
1626 W. Fond du Lac Avenue
Milwaukee, WI 53205
Phone: 414-933-7444, Fax: 414-933-7844

PROJECT NAME: Kenosha Wetland Mitigation Bank	DATE DRILLING STARTED: 10/11/2013	BORING NUMBER: **MW-3**	
PROJECT LOCATION: Kenosha, WI	DATE DRILLING ENDED: 10/11/2013	PROJECT NUMBER: 13091-10	
		DRILLING RIG: D-50 ATV	

BORING DRILLED BY: FIRM: Gestra CREW CHIEF: B. Sargent	FIELD LOG: B. Sargent	NORTHING: 214030	DRILLING METHOD: 2 1/4" ID HSA
	LAB LOG / QC: D. Born	EASTING: 2553886	SURFACE ELEVATION: 681.3 ft

Number and Type	Recovery (in)	Blow Counts	N - Value	Depth (ft)	Elevation	Soil Description and Geological Origin for Each Major Unit	USCS Classification	Graphic	Well Diagram	Unconfined Comp. Strength (Q_u or Q_p) (tsf)	Liquid Limit	Plasticity Index	Moisture Content (%)	Comments
SS - 1	8	3 3 5 5	8			TOPSOIL, clay, black, moist, with organics (roots) 1 (680.3)								Poor recovery in sample SS-1
						LEAN CLAY, black, moist 2.1 (679.2)	CL							
SS - 2	18	3 3 3 5	6			LEAN CLAY, brown, moist, stiff Mottled with gray at 3 ft 4 (677.3)	CL			1.5				
						End of Boring at 4.0 ft.								
				5	676.3									
				10	671.3									
				15	666.3									
				20	661.3									
				25	656.3									
				30	651.3									

WATER & CAVE-IN OBSERVATION DATA

WATER ENCOUNTERED DURING DRILLING: NE		CAVE DEPTH AT COMPLETION: NMR	WET ☐ DRY ☐
WATER LEVEL AT COMPLETION: NE		CAVE DEPTH AFTER 0 HOURS: N/A	WET ☐ DRY ☐
WATER LEVEL AFTER NMR HOURS: NMR		NE = Not Encountered; NMR = No Measurement Recorded	

NOTE: Stratification lines between soil types represent the approximate boundary; gradual transition between in-situ soil layers should be expected.

13091-10

State of Wisconsin
Department of Natural Resources

Route to: Watershed/Wastewater ☐ Waste Management ☐ Remediation/Redevelopment ☐ Other ☐ _____

MONITORING WELL CONSTRUCTION
Form 4400-113A Rev. 7-98

Facility/Project Name: Kenosha Wetland	Local Grid Location of Well: ____ ft. ☐ N. ☐ S. ____ ft. ☐ E. ☐ W.	Well Name: MW-3
Facility License, Permit or Monitoring No.: Mitigation Bank	Local Grid Origin ☐ (estimated: ☐) or Well Location ☐ Lat. ___ ° ___ ' ___ " Long. ___ ° ___ ' ___ " or	Wis. Unique Well No.: _____ / DNR Well ID No.: _____
Facility ID: _____	St. Plane ____ ft. N, ____ ft. E. S/C/N	Date Well Installed: 10/11/2013 (m m d d y y y y)
Type of Well: Well Code ____/____	Section Location of Waste/Source: ____ 1/4 of ____ 1/4 of Sec. ____, T. ____ N, R. ____ ☐ E ☐ W	Well Installed By: Name (first, last) and Firm: Bryan Sargent, GESTRA Engineering
Distance from Waste/Source ____ ft. Enf. Stds. Apply ☐	Location of Well Relative to Waste/Source: u ☐ Upgradient s ☐ Sidegradient d ☐ Downgradient n ☐ Not Known	Gov. Lot Number: _____

A. Protective pipe, top elevation _____ ft. MSL

B. Well casing, top elevation 684.2 ft. MSL

C. Land surface elevation 681.3 ft. MSL

D. Surface seal, bottom _____ ft. MSL or _____ ft.

12. USCS classification of soil near screen:
GP ☐ GM ☐ GC ☐ GW ☐ SW ☐ SP ☐
SM ☐ SC ☐ ML ☐ MH ☐ CL ☒ CH ☐
Bedrock ☐

13. Sieve analysis performed? ☐ Yes ☒ No

14. Drilling method used: Rotary ☐ 50; Hollow Stem Auger ☒ 41; Other ☐ _____

15. Drilling fluid used: Water ☐ 02; Air ☐ 01; Drilling Mud ☐ 03; None ☒ 99

16. Drilling additives used? ☐ Yes ☒ No

Describe _____

17. Source of water (attach analysis, if required): _____

E. Bentonite seal, top _____ ft. MSL or 0 ft.

F. Fine sand, top _____ ft. MSL or — ft.

G. Filter pack, top _____ ft. MSL or 4 in ft.

H. Screen joint, top _____ ft. MSL or 5 in ft.

I. Well bottom _____ ft. MSL or 36 in ft.

J. Filter pack, bottom _____ ft. MSL or 41 in ft.

K. Borehole, bottom _____ ft. MSL or 41 in ft.

L. Borehole, diameter 5 in.

M. O.D. well casing 1 5/8 in.

N. I.D. well casing 1 1/4 in.

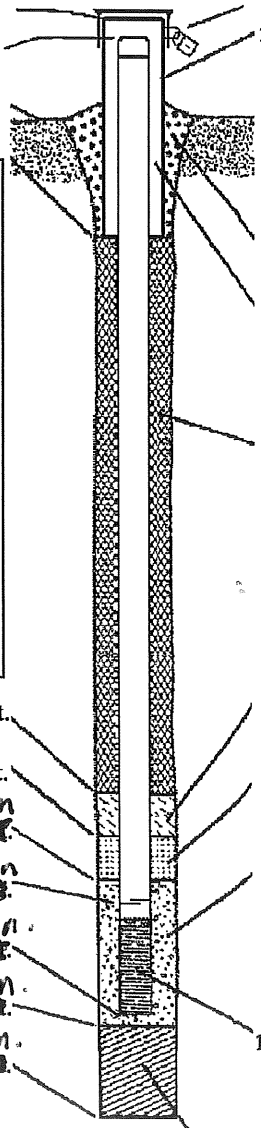

1. Cap and lock? ☒ Yes ☐ No

2. Protective cover pipe:
a. Inside diameter: ___ in.
b. Length: ___ ft.
c. Material: Steel ☐ 04; Other ☐ _____
d. Additional protection? ☐ Yes ☐ No
If yes, describe: _____

3. Surface seal: Bentonite ☒ 30; Concrete ☐ 01; Other ☐ _____

4. Material between well casing and protective pipe: N/A
Bentonite ☐ 30; Other ☐ _____

5. Annular space seal: a. Granular/Chipped Bentonite ☒ 33
b. ____ Lbs/gal mud weight . . . Bentonite-sand slurry ☐ 35
c. ____ Lbs/gal mud weight . . . . . Bentonite slurry ☐ 31
d. ____ % Bentonite . . . . . Bentonite-cement grout ☐ 50
e. ____ Ft^3 volume added for any of the above
f. How installed: Tremie ☐ 01; Tremie pumped ☐ 02; Gravity ☒ 08

6. Bentonite seal: a. Bentonite granules ☐ 33
b. ☐ 1/4 in. ☒ 3/8 in. ☐ 1/2 in. Bentonite chips ☒ 32
c. _____ Other ☐ _____

7. Fine sand material: Manufacturer, product name & mesh size
a. —
b. Volume added _____ ft^3

8. Filter pack material: Manufacturer, product name & mesh size
a. R.W. Sidley #10-20
b. Volume added _____ ft^3

9. Well casing: Flush threaded PVC schedule 40 ☐ 23; Flush threaded PVC schedule 80 ☒ 24; Other ☐ _____

10. Screen material: Sch 80 PVC
a. Screen type: Factory cut ☒ 11; Continuous slot ☐ 01; Other ☐ _____
b. Manufacturer Monoflex
c. Slot size: 0.010 in.
d. Slotted length: 31 in.

11. Backfill material (below filter pack): None ☒ 14; Other ☐ _____

I hereby certify that the information on this form is true and correct to the best of my knowledge.

Signature	Firm
Scott Mullen	GESTRA Engineering, Inc

Please complete both Forms 4400-113A and 4400-113B and return them to the appropriate DNR office and bureau. Completion of these reports is required by chs. 160, 281, 283, 289, 291, 292, 293, 295, and 299, Wis. Stats., and ch. NR 141, Wis. Adm. Code. In accordance with chs. 281, 289, 291, 292, 293, 295, and 299, Wis. Stats., failure to file these forms may result in a forfeiture of between $10 and $25,000, or imprisonment for up to one year, depending on the program and conduct involved. Personally identifiable information on these forms is not intended to be used for any other purpose. NOTE: See the instructions for more information, including where the completed forms should be sent.

Attachment 3

Well Development Forms

13091-10

State of Wisconsin
Department of Natural Resources

MONITORING WELL DEVELOPMENT
Form 4400-113B Rev. 7-98

Route to: Watershed/Wastewater ☐ Waste Management ☐
Remediation/Redevelopment ☐ Other ☐ _____

Facility/Project Name	County Name	Well Name
Kenosha Wetland Mitigation Bank	Kenosha	MW1
Facility License, Permit or Monitoring Number	**County Code**	**Wis. Unique Well Number** / **DNR Well ID Number**
	30	_____ / ___

1. Can this well be purged dry? ☒ Yes ☐ No

2. Well development method
   - surged with bailer and bailed ☐ 41
   - surged with bailer and pumped ☐ 61
   - surged with block and bailed ☐ 42
   - surged with block and pumped ☐ 62
   - surged with block, bailed and pumped ☐ 70
   - compressed air ☐ 20
   - bailed only ☒ 10
   - pumped only ☐ 51
   - pumped slowly ☐ 50
   - Other _____ ☐

3. Time spent developing well 35 min.

4. Depth of well (from top of well casisng) 6.1 ft.

5. Inside diameter of well 1.25 in.

6. Volume of water in filter pack and well casing ___.___ gal.

7. Volume of water removed from well 0.5 gal.

8. Volume of water added (if any) ___.___ gal.

9. Source of water added _____

10. Analysis performed on water added? ☐ Yes ☐ No
(If yes, attach results)

	Before Development	After Development
11. Depth to Water (from top of well casing)	a. 5.31 ft.	5.05 ft.
Date	b. 10/22/2013 (m m d d y y y y)	10/22/2013 (m m d d y y y y)
Time	c. 2:12 ☐ a.m. ☒ p.m.	2:50 ☐ a.m. ☒ p.m.
12. Sediment in well bottom	___.___ inches	___.___ inches
13. Water clarity	Clear ☐ 10 Turbid ☒ 15 (Describe) Opaque Brown	Clear ☐ 20 Turbid ☒ 25 (Describe) Opaque Lt. Brown

Fill in if drilling fluids were used and well is at solid waste facility:

14. Total suspended solids	____.___ mg/l	____.___ mg/l
15. COD	____.___ mg/l	____.___ mg/l

16. Well developed by: Name (first, last) and Firm
First Name: Bonnie Last Name: Bills
Firm: GESTRA Engineering, Inc.

17. Additional comments on development:
Dried well 3x; Re-charged quickly

Name and Address of Facility Contact/Owner/Responsible Party
First Name: Scott Last Name: Miller
Facility/Firm: GESTRA Engineering, Inc.
Street: 1626 W. Fond du Lac Ave.
City/State/Zip: Milwaukee, WI 53205

I hereby certify that the above information is true and correct to the best of my knowledge.
Signature: Scott Miller
Print Name: Scott Miller
Firm: GESTRA Engineering, Inc.

NOTE: See instructions for more information including a list of county codes and well type codes.

13091-10

State of Wisconsin
Department of Natural Resources

MONITORING WELL DEVELOPMENT
Form 4400-113B Rev. 7-98

Route to: Watershed/Wastewater ☐ Waste Management ☐
Remediation/Redevelopment ☐ Other ☐ _____

Facility/Project Name	County Name	Well Name
Kenosha Wetland Mitigation Bank	Kenosha	MW2
Facility License, Permit or Monitoring Number	**County Code**	**Wis. Unique Well Number** / **DNR Well ID Number**
	30	_____ / ___

1. Can this well be purged dry? ☐ Yes ☒ No

2. Well development method
   - surged with bailer and bailed ☒ 41
   - surged with bailer and pumped ☐ 61
   - surged with block and bailed ☐ 42
   - surged with block and pumped ☐ 62
   - surged with block, bailed and pumped ☐ 70
   - compressed air ☐ 20
   - bailed only ☐ 10
   - pumped only ☐ 51
   - pumped slowly ☐ 50
   - Other _____ ☐

3. Time spent developing well 30 min.

4. Depth of well (from top of well casisng) 60 ft.

5. Inside diameter of well 1.25 in.

6. Volume of water in filter pack and well casing 3. gal.

7. Volume of water removed from well ___. gal.

8. Volume of water added (if any) ___. gal.

9. Source of water added _____

10. Analysis performed on water added? ☐ Yes ☐ No
(If yes, attach results)

	Before Development	After Development
11. Depth to Water (from top of well casing)	a. 4.30 ft.	4.32 ft.
Date	b. 10/22/2013 (m m / d d / y y y y)	10/22/2013 (m m / d d / y y y y)
Time	c. 3:10 ☐ a.m. ☒ p.m.	3:40 ☐ a.m. ☐ p.m.
12. Sediment in well bottom	___. inches	___. inches
13. Water clarity	Clear ☐ 10 Turbid ☒ 15 (Describe) opaque brown	Clear ☐ 20 Turbid ☒ 25 (Describe) translucent lt. brown

Fill in if drilling fluids were used and well is at solid waste facility:

14. Total suspended solids ____. mg/l ____. mg/l

15. COD ____. mg/l ____. mg/l

16. Well developed by: Name (first, last) and Firm
First Name: Bonnie Last Name: Bills
Firm: GESTRA Engineering, Inc.

17. Additional comments on development:

Could not dry well; Water cleared considerably.

Name and Address of Facility Contact/Owner/Responsible Party
First Name: Scott Last Name: Miller
Facility/Firm: GESTRA Engineering, Inc.
Street: 1626 W. Fond du Lac Ave.
City/State/Zip: Milwaukee, WI 53205

I hereby certify that the above information is true and correct to the best of my knowledge.
Signature: Scott Miller
Print Name: Scott Miller
Firm: GESTRA Engineering, Inc.

NOTE: See instructions for more information including a list of county codes and well type codes.

13091-10

State of Wisconsin
Department of Natural Resources

MONITORING WELL DEVELOPMENT
Form 4400-113B Rev. 7-98

Route to: Watershed/Wastewater ☐ Waste Management ☐
Remediation/Redevelopment ☐ Other ☐ _____

Facility/Project Name	County Name	Well Name
Kenosha Wetland Mitigation Bank	Kenosha	MW 3
Facility License, Permit or Monitoring Number	**County Code**	**Wis. Unique Well Number** / **DNR Well ID Number**
	30	_____ / ___

1. Can this well be purged dry? ☒ Yes ☐ No

2. Well development method
   - surged with bailer and bailed ☐ 41
   - surged with bailer and pumped ☐ 61
   - surged with block and bailed ☐ 42
   - surged with block and pumped ☐ 62
   - surged with block, bailed and pumped ☐ 70
   - compressed air ☐ 20
   - bailed only ☒ 10
   - pumped only ☐ 51
   - pumped slowly ☐ 50
   - Other _____ ☐

3. Time spent developing well 20 min.

4. Depth of well (from top of well casisng) 6.0 ft.

5. Inside diameter of well 1.25 in.

6. Volume of water in filter pack and well casing ___.__ gal.

7. Volume of water removed from well ~~2.5~~ 0.3 gal.

8. Volume of water added (if any) ___.__ gal.

9. Source of water added _____

10. Analysis performed on water added? ☐ Yes ☐ No
(If yes, attach results)

	Before Development	After Development
11. Depth to Water (from top of well casing)	a. 5.68 ft.	5.86 ft.
Date	b. 10/22/2013 (mm/dd/yyyy)	10/22/2013 (mm/dd/yyyy)
Time	c. 48:10 ☐ a.m. ☒ p.m.	48:30 ☐ a.m. ☒ p.m.
12. Sediment in well bottom	___.__ inches	___.__ inches
13. Water clarity	Clear ☐ 10 / Turbid ☒ 15	Clear ☐ 20 / Turbid ☒ 25
(Describe)	Opaque lt Brown	opaque brown

Fill in if drilling fluids were used and well is at solid waste facility:

14. Total suspended solids	____.__ mg/l	____.__ mg/l
15. COD	____.__ mg/l	____.__ mg/l

16. Well developed by: Name (first, last) and Firm
First Name: Bonnie Last Name: Bills
Firm: GESTRA Engineering, Inc.

17. Additional comments on development:

Dried well 3x ; slow recharge

Name and Address of Facility Contact/Owner/Responsible Party
First Name: Scott Last Name: Miller
Facility/Firm: GESTRA Engineering, Inc.
Street: 1626 W. Fond du Lac Ave.
City/State/Zip: Milwaukee, WI 53205

I hereby certify that the above information is true and correct to the best of my knowledge.
Signature: Scott Miller
Print Name: Scott Miller
Firm: GESTRA Engineering, Inc.

NOTE: See instructions for more information including a list of county codes and well type codes.

Attachment 4

Slug Test Reports

GESTRA Engineering, Inc
1626 W. Fond du Lac Avenue
Milwaukee, WI 53205
Phone: (414) 933-7444; Fax: (414) 933-7844

Slug Test

Project:	Kenosha Wetland Mitigation Bank	Project no.:	13091-10
Test Date:	November 1, 2013	Boring no.:	MW-1
Description of Soil:	Silty clay loam, drak brown, moist	Depth:	0"-36"
Project Location:	Kenosha, WI	Report to:	Short Elliot Hendrickson, Inc.

Radius of Well Casing (in):	0.625	1/2 of Diameter of well casing	Diameter of well casing (in)	1.25
Radius of screen & packing (in)	2.5	1/2 of Diameter of screen & packing (Bore hole)	Diameter of Bore Hole	5.0
Length of Well screen & packing (in):	32.0	Screened length & any packing above the screen	Is any filter pack above screen joint?	Yes
Depth to Top of Screen (in):	5.0			
Static Water Level (ft)	5.63		Is any screen above static water level?	Yes
Porosity of packing Material:	0.1			
Size of slug (ml)	500.0		(If yes, use relative radius value in Hvorslev Eq.)	

Static Water Level (ft)	Time Elapsed (min)
5.18	0
5.18	1
5.18	2
5.19	2.7
5.19	6
5.19	12
5.19	16
5.22	27
5.23	63
5.23	121
5:24	141
5.24	182
5.24	198
5.26	1570

$$r_a = \{(1.0-\eta)r^2 + \eta R^2\}^{1/2}$$

Relative radius	r_a	0.98
Porosity of Sand pack	η	0.10
Radius of well casing (in)	r	0.63
Radius of screen and packing (in)	R	2.50

Hvorslev

$$K=\{r^2\ln(L/R)\}/2LT_0$$

Hydraulic Conductivity (Cm/sec)	K	2.74E-08
Radius of well casing	r_a	0.98
Length of Well screen & packing (cm):	L	81.3
Time to return to 37% of Static Water Level (sec)	T_0	546500
Radius of Screen & packing (cm)	R	6.35

Technician:	BJB
Checked By:	SDM

GESTRA Engineering, Inc
1626 W. Fond du Lac Avenue
Milwaukee, WI 53205
Phone: (414) 933-7444; Fax: (414) 933-7844

Slug Test

Project:	Kenosha Wetland Mitigation Bank	Project no.:	13091-10
Test Date:	November 1, 2013	Boring no.:	MW-2
escription of Soil:	Silty clay loam, dark brown, moist	Depth:	0"-36"
Project Location:	Kenosha, WI	Report to:	Short Elliot Hendrickson, Inc.

Radius of Well Casing (in):	0.625	1/2 of Diameter of well casing
Radius of screen & packing (in)	2.5	1/2 of Diameter of screen & packing (Bore hole)
Length of Well screen & packing (in):	32.0	Screened length & any packing above the screen
Depth to Top of Screen (in):	5.0	
Static Water Level (ft)	4.25	
Porosity of packing Material:	0.1	
Size of slug (ml)	50.0	

Diameter of well casing (in)	1.25
Diameter of Bore Hole (in)	5.0
Is any filter pack above screen joint?	Yes
Is any screen above static water level?	Yes

(If yes, use relative radius value)

Static Water Level (ft)	Time Elapsed (min)
3.78	0
3.79	1
3.81	2
3.82	2.3
3.83	3
3.83	4
3.84	5.6
3.84	45
3.86	120
3.88	166
3.89	223
3.91	270
3.91	285
4.27	1673

$$r_a = \{(1.0-\eta)r^2 + \eta R^2\}^{1/2}$$

relative radius	r_A	0.98
porosity	η	0.10
Radius of well casing (in)	r	0.6250
Radius of screen and packing (in)	R	2.50

Hvorslev:

$$K=\{r^2\ln(L/R)\}/2LT_0$$

Hydraulic Conductivity (cm/sec)	K	3.84E-05
Radius of well casing	r	0.98
Length of Well screen & packing (cm):	L	81.3
Time to return to 37% of Static Water Level (sec)	T_0	389
Radius of Screen & packing (cm)	R	6.35

Technician: BJB
Checked By: SDM

GESTRA Engineering, Inc
1626 W. Fond du Lac Avenue
Milwaukee, WI 53205
Phone: (414) 933-7444; Fax: (414) 933-7844

Slug Test

Project:	Kenosha Wetland Mitigation Bank	Project no.:	13091-10
Test Date:	November 1, 2013	Boring no.:	MW-3
Description of Soil:	Silty clay loam, dark brown, moist	Depth:	0"-36"
Project Location:	Kenosha, WI	Report to:	Short Elliot Hendrickson, Inc.

Radius of Well Casing (in):	0.625	1/2 of Diameter of well casing	Diameter of well casing (in)	1.25
Radius of screen & packing (in)	2.5	1/2 of Diameter of screen & packing	Diameter of Bore Hole (in)	5.0
Length of Well screen & packing (in):	32.0	Screened length & any packing above the screen	Is any filter pack above screen joint?	Yes
Depth to Top of Screen (in):	5.0			
Static Water Level (ft)	5.80		Is any screen above static water level?	Yes
Porosity of packing Material:	0.1			
Size of slug (ml)	500.0		(If yes, use relative radius value)	

Static Water Level (ft)	Time Elapsed (min)
5.50	0
5.50	1
5.50	2
5.51	2.5
5.51	4
5.52	6
5.52	48
5.52	50
5.52	53
5.55	70
5.55	79
5.55	192
5.56	234
5.56	1626

$$r_a = \{(1.0-\eta)r^2 + \eta R^2\}^{1/2}$$

relative radius	r_A	0.98
porosity	η	0.10
Radius of well casing (in)	r	0.63
Radius of screen and packing (in)	R	2.50

Hvorslev

$$K=\{r^2\ln(L/R)\}/2LT_0$$

Hydraulic Conductivity (cm/sec)	K	5.91E-07
Radius of well casing	r	0.98
Length of Well screen & packing	L	81.3
Time to return to 37% of Static Water Level (sec)	T_0	25275
Radius of Screen & packing (cm)	R	6.35

Technician: BJB
Checked By: SDM

Attachment 5

Laboratory Test Reports

Boring B-1

GESTRA Engineering, Inc
1626 W. Fond du Lac Avenue
Milwaukee, WI 53205
Phone: (414) 933-7444; Fax: (414) 933-7844

Laboratory Test Results of Atterberg Limits of Soil

Project Name:	Kenosha Wetland Mitigation Banl	Date:	October 28, 2013
Project Number:	13091-10	Client:	Short. Elliot, Hendrickson, Inc.
Project Location:	Kenosha, WI		
ASTM Designation:	**D4318**		

Sample Information

Type of Sample	Split Spoon
Boring Number	B 1
Sample Number	2
Depth of Sample	2.5'-3'

Determination of Liquid Limit

Cup Number	L18	L8	D21
Weight of Cup (g)	14.48	14.38	14.31
Weight of Wet Soil and Cup (g)	34.11	44.62	39.79
Weight of Dry Soil and Cup (g)	28.19	35.40	31.83
Moisture Content (%)	43.2	43.9	45.4
Blow Counts	32	23	18

Determination of Plastic Limit

Cup Number	D14	B19
Weight of Cup (g)	7.24	7.14
Weight of Wet Soil and Cup (g)	13.49	13.93
Weight of Dry Soil and Cup (g)	12.53	12.91
Moisture Content (%)	18.1	17.7

Compilation of Test Results

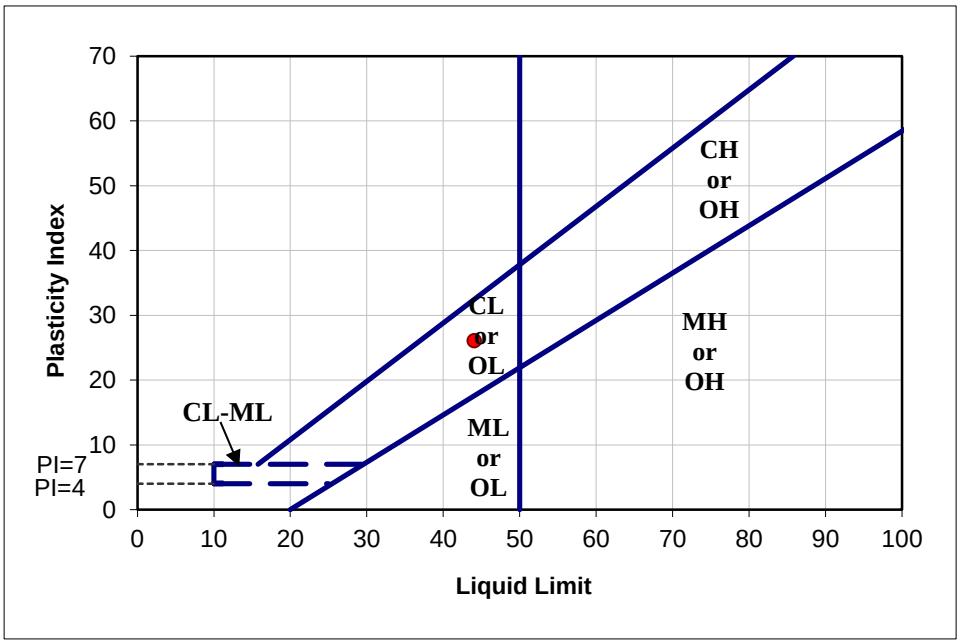

Liquid Limit	44
Plastic Limit	18
Plasticity Index	26
USCS Symbol	**CL**

Performed by: BJB

Reviewed By: SDM

GESTRA Engineering, Inc.

GESTRA Engineering, Inc
1626 W. Fond du Lac Avenue
Milwaukee, WI 53205
Phone: (414) 933-7444; Fax: (414) 933-7844

Laboratory Test Results of Mechanical Analysis of Soil or Aggregate

Project Name:	Kenosha Wetland Mitigation Bank	Date:	October 23, 2013
Project Number:	13091-10	Reported To:	Short. Elliot, Hendrickson, Inc.
Project Location:	Kenosha, WI		
ASTM Designation:	**C136, D422**		

Sample Information

Type of Sample:	Split Spoon	Sample Number:	4
Boring Number:	B1	Depth of Sample:	6.5'-7'

Mechanical Analysis Data

Sieve	Sieve Opening (mm)	Percent Passing (%)
2	50.8	100.0
1 1/2	38.1	100.0
1	25.4	100.0
3/4	19.05	100.0
3/8	9.525	92.8
#4	4.75	86.2
#8	2.36	80.4
#10	2	79.4
#16	1.18	75.2
#30	0.6	68.4
#40	0.425	63.3
#50	0.3	55.8
#100	0.15	36.8
#200	0.075	30.4

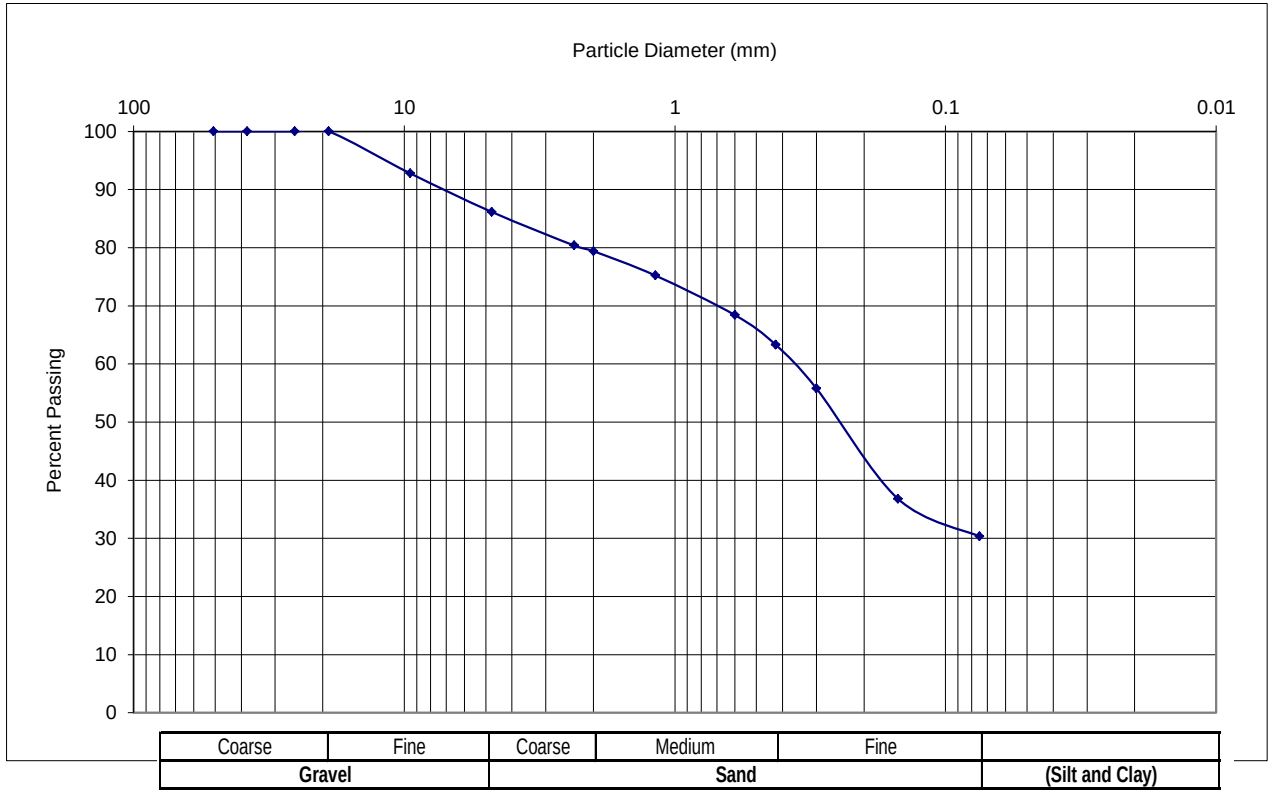

Remarks: Gravel 13.8 % Sand 55.8 %
Passing #200 Sieve (Silt & Clay) 30.4 %

Reviewed by: SDM
GESTRA Engineering, Inc.

Performed by: BJB

Geotechnical-Structural-Pavement-Construction Material

Attachment 6

Soil Characterization Data Forms (Appendix A)

Monitoring Well Installation Data Forms (Appendix B)

APPENDIX A. SOIL CHARACTERIZATION DATA FORM

Soil Characterization Data Form

Project Name Kenosha Wetland Mitagation Bank Date 11·12·13
Personnel B.B.Ills Soil Pit ID MW-1

Horizon Depths (inches)	Texture	Matrix Color (Munsell moist)	Redoximorphic Features		Induration (none, weak, strong)	Roots
			Color	Abundance		
0-6	Silty Clay Loam	10yr 2/1	NONE		NONE	SOME
6-12	Silty Clay Loam	10 yr 2/1	Lt. Red Brown	Common	NONE	SOME
12-18	Silty Clay Loam	10 yr 2/1	Lt. Red Brown	Common	NONE	LITTLE
24-30	Silty Clay Loam	10 yr 2/1	NONE		NONE	TRACE
30-34	Silty Clay Loam	10 yr 2/1	NONE		NONE	NONE
34-36	Sandy Clay Loam	10yr 3/4	NONE		NONE	NONE
36-42	Sandy Clay Loam	10yr 3/4	Lt. Red Brown	Some	NONE	NONE

Comments:

APPENDIX A. SOIL CHARACTERIZATION DATA FORM

Soil Characterization Data Form

Project Name Kenosha Wetlands Mitagation Bank Date 11·12·13
Personnel B. Bills Soil Pit ID MW-2

Horizon Depths (inches)	Texture	Matrix Color (Munsell moist)	Redoximorphic Features		Induration (none, weak, strong)	Roots
			Color	Abundance		
0-12	Silty Clay Loam	10YR 2/2	NONE		NONE	NONE
12-24	Silty Clay Loam	10YR 2/2	Lt. Red Brown	SOME	NONE	NONE
24-36	Silty Clay Loam	10YR 2/2	Lt. Red Brown	COMMON	NONE	NONE
36-48	Loamy Sand	10YR 3/2	Lt. Red Brown	SOME	NONE	NONE
	w coarse sand					

Comments:

APPENDIX A. SOIL CHARACTERIZATION DATA FORM

Soil Characterization Data Form

Project Name Kenosha Wetlands Mitigation Bank Date 11·12·13
Personnel B.Bills Soil Pit ID MW-3

Horizon Depths (inches)	Texture	Matrix Color (Munsell moist)	Redoximorphic Features		Induration (none, weak, strong)	Roots
			Color	Abundance		
0-6	Silty Clay Loam	10YR 2/1	NONE		NONE	TRACE
6-12	Silty Clay Loam	10YR 2/1	Lt. Red Brown	Some	NONE	TRACE
24-27	Silty Clay Loam	10YR 2/1	NONE		NONE	TRACE
27-30	Sandy Clay Loam	10YR 3/4	NONE		NONE	NONE
30-36	Sandy Clay Loam	10YR 3/4	Lt. Red Brown	Some	NONE	NONE
36-42	Sandy Clay Loam	10YR 3/3	white	Some	NONE	NONE
			Dissolution Spots			

Comments: 30-42 Sandy Clay Loam w coarse sand

APPENDIX B. MONITORING WELL INSTALLATION DATA FORM

Monitoring Well Installation Data Form

Project Name Kenosha Wetland Mitigation Bank
Date of Installation 10·11·2013
Project Location Kenosha Co. WI
Personnel B. Sargent
Well Identification Code MW1
Attach map of project, showing well locations and significant topographic and hydrologic features.

Characteristics of Instrument:
Source of instrument/well stock Monoflex
Material of well stock Sched 80 PVC
Diameter of pipe 1.25" ID
Slot width 0.010"
Slot spacing 1/8"
Kind of well cap 1" expandable plug
Kind of well point/end plug ~~threaded~~ cap

Installation:
Was well installed by augering or driving? Auger
Kind of filter sand RW Sibley #10-20
Kind of bentonite 3/8" chips
Depth to lowest screen slots 36" bgs
Riser height above ground 2.8' ~~abs~~ ags
Was bentonite wetted for expansion? YES
Method of measuring water levels in instrument water level indicator
How was instrument checked for clogging after installation? Purged & Developed with bailer

Instrument Diagram[a]	Soil Characteristics					
	Texture	Matrix Color	Redoximorphic Features		Induration (none, weak, strong)	Roots
			Color	Abundance		
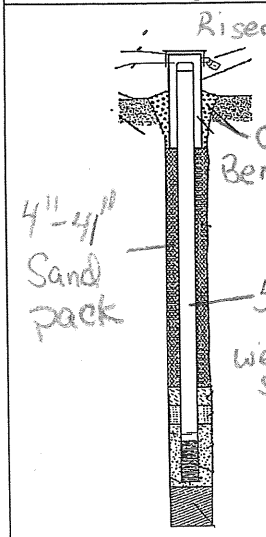	Silty Clay Loam (0-34")	10YR 2/1	Lt. Red Brown	Some	NONE	Some
	Sandy Clay Loam (34"-41")	10YR 3/4	Lt. Red Brown	Some	NONE	Some

[a]Show depths (heights) of riser, well screen, sand pack, and bentonite in relation to soil horizons.

APPENDIX B. MONITORING WELL INSTALLATION DATA FORM

Monitoring Well Installation Data Form

Project Name Kenosha Wetland Mitigation Bank
Date of Installation 10·11·2013
Project Location Kenosha Co. WI
Personnel B. Sargent
Well Identification Code MW2
Attach map of project, showing well locations and significant topographic and hydrologic features.

Characteristics of Instrument:
Source of instrument/well stock Monoflex
Material of well stock Sched 80 PVC
Diameter of pipe 1.25" ID
Slot width 0.010"
Slot spacing 1/8"
Kind of well cap 1" expandable plug
Kind of well point/end plug threaded cap

Installation:
Was well installed by augering or driving? auger
Kind of filter sand RW Sibley #10-20
Kind of bentonite 3/8" chips
Depth to lowest screen slots 36" bgs
Riser height above ground 2.7' ags
Was bentonite wetted for expansion? YES
Method of measuring water levels in instrument water level indicator
How was instrument checked for clogging after installation? Purged & Developed with bailer

Instrument Diagram[a]	Soil Characteristics					
	Texture	Matrix Color	Redoximorphic Features		Induration (none, weak, strong)	Roots
			Color	Abundance		
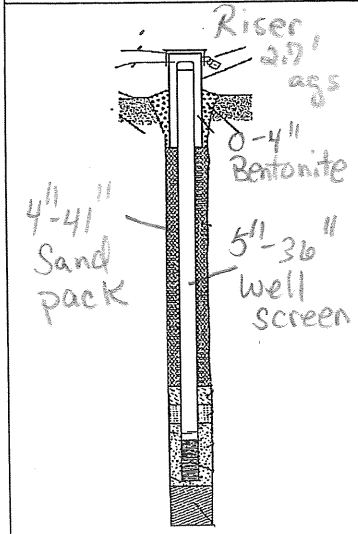	Silty Clay Loam (0-36")	10YR 2/2	Lt. Red-Brown	Some	None	NONE
	Loamy Sand (36"-48")	10YR 3/2	Lt. Red-Brown	Some	NONE	NONE

[a]Show depths (heights) of riser, well screen, sand pack, and bentonite in relation to soil horizons.

APPENDIX B. MONITORING WELL INSTALLATION DATA FORM

Monitoring Well Installation Data Form

Project Name Kenosha Wetland Mitigation Bank
Date of Installation 10·11·2013
Project Location Kenosha Co. WI
Personnel B. Sargent
Well Identification Code MW-3
Attach map of project, showing well locations and significant topographic and hydrologic features.

Characteristics of Instrument:
Source of instrument/well stock Monoflex
Material of well stock Sched 80 PVC
Diameter of pipe 1.25" ID
Slot width 0.010"
Slot spacing 1/8"
Kind of well cap 1" expandable plug
Kind of well point/end plug threaded cap

Installation:
Was well installed by augering or driving? Auger
Kind of filter sand RW Sibley #10-20
Kind of bentonite 3/8" chips
Depth to lowest screen slots 36" bgs
Riser height above ground 2.9' ags
Was bentonite wetted for expansion? YES
Method of measuring water levels in instrument water level indicator
How was instrument checked for clogging after installation? Purged & Developed with bailer

Instrument Diagram[a]	Soil Characteristics					
	Texture	Matrix Color	Redoximorphic Features		Induration (none, weak, strong)	Roots
			Color	Abundance		
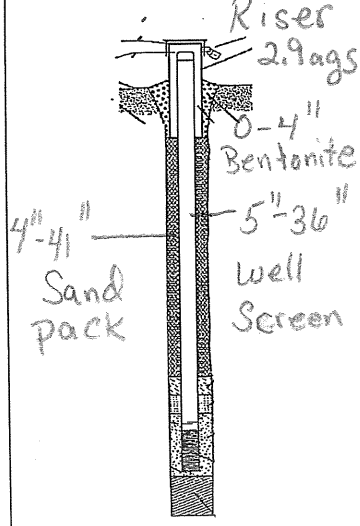	Silty Clay Loam (0-27")	10YR 2/1	Lt. Red-Brown	Some	NONE	Trace
	Sandy Clay Loam (27"-42")	10YR 3/4	Lt. Red-Brown	Trace	NONE	NONE

[a]Show depths (heights) of riser, well screen, sand pack, and bentonite in relation to soil horizons.

GESTRA Engineering, Inc.
1626 W. Fond Du Lac Avenue
Milwaukee, WI 53205
Phone: (414) 933-7444
Fax: (414) 933-7840

June 6, 2014

Tom Sear
Short Elliot Hendrickson Inc.
5395 North 118th Court
Milwaukee, Wisconsin 53225

Subject: MW-2 Well Replacement Report
Project #08-1226_Wetland Mitigation Bank Groundwater Monitoring and Evaluation
Kenosha, Wisconsin

Dear Mr. Sear:

GESTRA Engineering Inc. (GESTRA) has teamed with Short Elliot Hendrickson Inc. (SEH) on the above referenced Kenosha Stormwater Utility project to provide shallow groundwater monitoring and evaluation services for a 13 acre site located adjacent to the Kilbourn Road Ditch in Kenosha, Wisconsin.

This report presents documentation for installation, development, and readings at monitoring well MW-2A. This well was installed to replace monitoring well MW-2, which had been installed to 36-inches below ground surface (bgs). MW-2 was replaced because it was suspected that MW-2 penetrated the near surface clay layer and was screened into an underlying more permeable sand layer. The other two wells at the site were also installed to 36-inches bgs. Hydraulic conductivity testing of the original MW-2 indicated estimated hydraulic conductivity of 3.8×10^{-5} cm/sec. The other two wells had estimated hydraulic conductivity values of 2.7×10^{-8} cm/sec (MW-1) and 5.9×10^{-7} cm/sec (MW-3).

Replacement well MW-2A was installed 10 feet north of MW-2, to a more shallow depth of 30-inches bgs in an attempt to screen the well within the clay layer rather an underlying sand layer.

Well Abandonment

The original monitoring well MW-2 was abandoned on 04/02/14 by removing the PVC casing from the ground and backfilling with bentonite chips.

Soil Borings:

GESTRA completed one 30-inch deep soil boring (MW-2A) on 04/02/14 using a 4-inch diameter hand auger. The location of MW-2A is shown in Figure 1. Samples were collected continuously. The MW-2A boring log is presented in Attachment 1.

Monitoring Well Installation

1.25-inch (inside diameter) monitoring well MW-2A was installed on 04/02/14. The well was installed in the 4-inch diameter bore hole to a depth of 30-inches bgs. The monitoring well was constructed of schedule 80 PVC, with 25-inches of 0.010-inch slotted screen. The well construction form is included in Attachment 2.

Well Development

Replacement well MW-2A was developed on 04/02/14. The well development form included in Attachment 3.

Well Performance Assessment

Hydraulic conductivity testing was completed at MW-2A on 04/04/14. Testing was completed using a 2,600 ml slug. Hydraulic conductivity was calculated using Hvorslev's equation. Results of the slug test determined the following estimated hydraulic conductivity (K):

- MW-2A: Hydraulic conductivity of 8.6×10^{-5} cm/sec

(Comment on higher K value: MW-2A was installed shortly after frost had left the ground. The area around MW-2A was noted to be very moist and soft, which may have affected the hydraulic conductivity of near surface soils. In addition, animal burrows were observed in the area, and while not observed in the boring, nearby burrows could make the near surface soils more permeable.)

The Slug Test report is included in Attachment 4.

Additional Site Characterization

Per the Army Corps of Engineers publication Technical Standard for Water-Table Monitoring of Potential Wetland Sites (ERDC-TN-WRAP-05-2, June 2005), a soil profile description of MW-2A (Appendix A) and monitoring well installation data form (Appendix B) were completed and are included in Attachment 5.

Survey/Groundwater Elevations

The City of Kenosha surveyed and staked the original boring locations fall of 2013. Replacement well MW-2A was completed 10 feet north of the original MW-2. The same ground elevation was used for MW-2 and top of casing elevation was determined by

measuring from the ground surface to top of casing. Groundwater elevation data was collected on 04/04/14 during conductivity testing. Table 1 shows survey information and groundwater elevation data collected at replacement well MW-2A.

If you have any questions concerning this report, please contact us at 414-933-7444.

Sincerely,

GESTRA Engineering, Inc.

Report Prepared By:

Scott Miller
Drilling Coordinator

Report Reviewed By:

Doug Bath, P.E.
Project Manager

PHIL SANDER NATURE AREA - WETLAND MITIGATION BANK

Figure 1

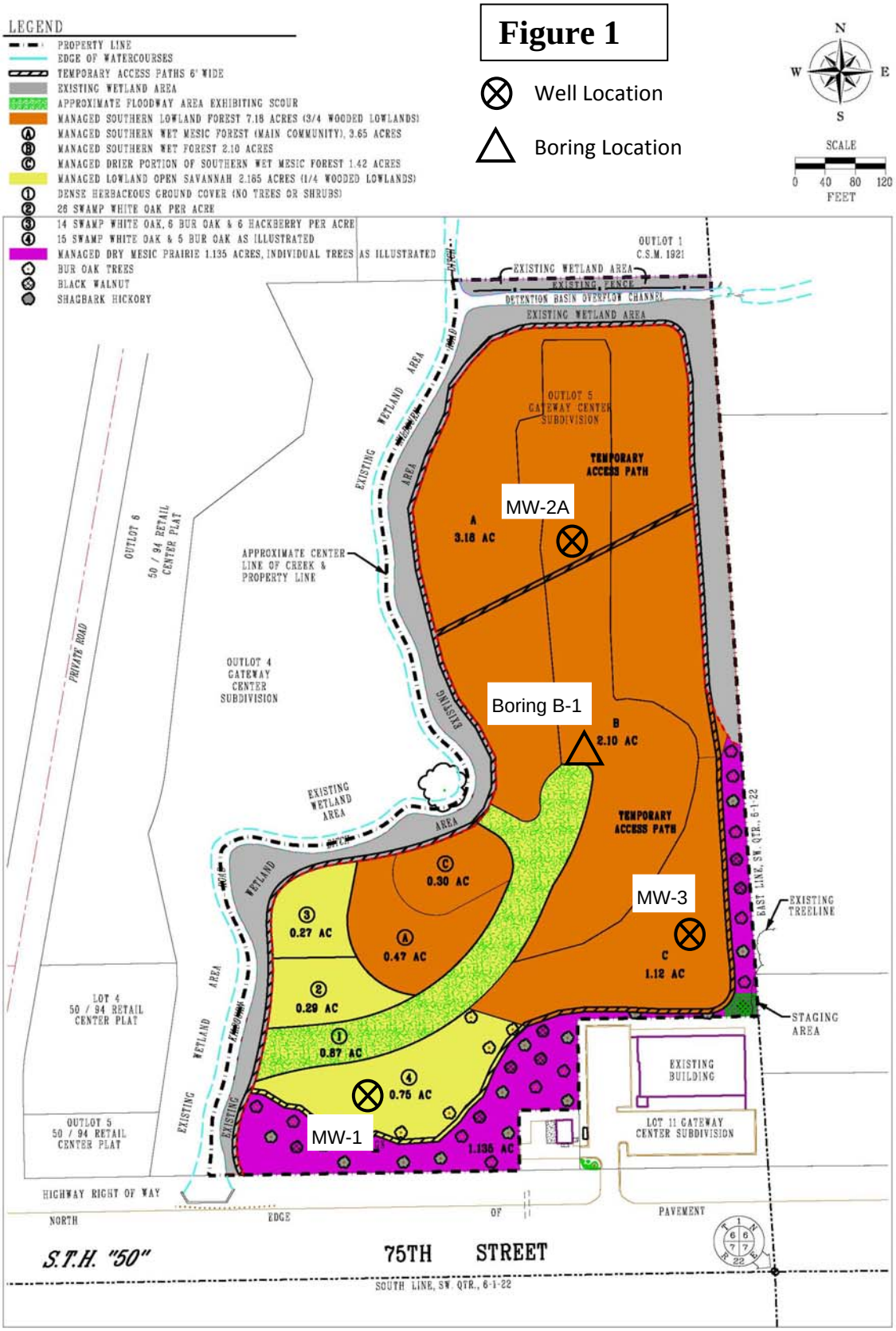

9	REVISIONS	Survey By : RZ Date : 12/2010	CITY OF KENOSHA DEPARTMENT OF PUBLIC WORKS - ENGINEERING 625 52nd St. Room 302 Kenosha, Wisconsin 53140 ph (262) 653-450 fax (262) 653-4056	PHIL SANDER NATURE AREA PROPOSED MANAGED PLANT COMMUNITIES
	1/6/2012 DRAFT PLAN II	Design By : RLC Date : 12/2010		
		Drawn By : BJZ Date : 12/2010		
		Checked By : KJR Date : 12/2010		JOB NO. 10-1126 Sheet No. 9 of 10
		Approved By : MML Date :		

Table 1

Summary of Survey Information and Groundwater Elevation Monitoring_Replacement Well MW-2A

Project #08-1226_Wetland Mitigation Bank Groundwater Monitoring and Evaluation

Well No.	Northing	Easting	Ground Elevation (ft, MSL)	Top of Well Casing Elevation (ft, MSL)*	Depth to Water from Top of Casing_10/22/13	Groundwater Elevation_04/04/14 (ft, MSL)
MW-2A	214562.7	2553729	680.24	682.82	4.25	678.6

* Top of casing elevation determined in field by measuring from ground surface to top of casing

Note: Boring and well survey information provided by others

Attachment 1

MW-2A Boring Log

SOIL BORING LOG

Gestra Engineering Inc.
1626 W. Fond du Lac Avenue
Milwaukee, WI 53205
Phone: 414-933-7444, Fax: 414-933-7844

PROJECT NAME: Kenosha Wetland Mitigation Bank	DATE DRILLING STARTED: 4/2/2014	PAGE NUMBER: 1 of 1	BORING NUMBER: MW-2A
PROJECT LOCATION: Kenosha, WI	DATE DRILLING ENDED: 4/2/2014	PROJECT NUMBER: 13091-10	DRILLING RIG:
BORING DRILLED BY: FIRM: Gestra, CREW CHIEF: B. Bills	FIELD LOG: B. Bills	NORTHING: 214563	DRILLING METHOD: 4" Hand Auger
	LAB LOG / QC: S. Miller	EASTING: 2553729	SURFACE ELEVATION: 680.2 ft

Number and Type	Recovery (in)	Blow Counts	N - Value	Depth (ft)	Elevation	Soil Description and Geological Origin for Each Major Unit	USCS Classification	Graphic	Well Diagram	Unconfined Comp. Strength (Q_u or Q_p) (tsf)	Liquid Limit	Plasticity Index	Moisture Content (%)	Comments
						TOPSOIL, clay, black, moist, with organics (roots) 2 (678.2)								
						SANDY LEAN CLAY, brown with gray, very moist, little fine gravel 2.5 (677.7)	CL							
						End of Boring at 2.5 ft.								
				5	675.2									
				10	670.2									
				15	665.2									
				20	660.2									
				25	655.2									
				30	650.2									

WATER & CAVE-IN OBSERVATION DATA

WATER ENCOUNTERED DURING DRILLING (ft): NE		CAVE DEPTH AT COMPLETION (ft): NE	WET ☐ DRY ☐
WATER LEVEL AT COMPLETION (ft): 1.4 ft.		CAVE DEPTH AFTER 0 HOURS (ft): N/A	WET ☐ DRY ☐
WATER LEVEL AFTER NMR HOURS (ft): NMR		NE = Not Encountered; NMR = No Measurement Recorded	

NOTE: Stratification lines between soil types represent the approximate boundary; gradual transition between in-situ soil layers should be expected.

Attachment 2

MW-2A Well Construction Form

#13091-10

State of Wisconsin
Department of Natural Resources

Route to: Watershed/Wastewater ☐ Waste Management ☐ Remediation/Redevelopment ☐ Other ☐ _____

MONITORING WELL CONSTRUCTION
Form 4400-113A Rev. 7-98

Facility/Project Name: Kenosha Wetland	Local Grid Location of Well: ____ ft. ☐ N. ☐ S. ____ ft. ☐ E. ☐ W.	Well Name: MW-2A
Facility License, Permit or Monitoring No.: Mitigation Bank	Local Grid Origin ☐ (estimated: ☐) or Well Location ☐ Lat. ___° ___' ___" Long. ___° ___' ___" or	Wis. Unique Well No.: ____ / DNR Well ID No.: ____
Facility ID: ____	St. Plane ____ ft. N, ____ ft. E. S/C/N	Date Well Installed: 04/02/2014 (m m d d y y y y)
Type of Well: Well Code ____/____	Section Location of Waste/Source: ____1/4 of ____ 1/4 of Sec. ____, T. ____ N, R. ____ ☐ E ☐ W	Well Installed By: Name (first, last) and Firm: Bonnie Bills, Gestra Engineering
Distance from Waste/Source ____ ft. Enf. Stds. Apply ☐	Location of Well Relative to Waste/Source: u ☐ Upgradient s ☐ Sidegradient d ☐ Downgradient n ☐ Not Known; Gov. Lot Number: ____	

A. Protective pipe, top elevation ____ ft. MSL

B. Well casing, top elevation 682.8 ft. MSL

C. Land surface elevation 680.2 ft. MSL

D. Surface seal, bottom ____ ft. MSL or ____ ft.

12. USCS classification of soil near screen:
GP ☐ GM ☐ GC ☐ GW ☐ SW ☐ SP ☐
SM ☐ SC ☐ ML ☐ MH ☐ CL ☒ CH ☐
Bedrock ☐

13. Sieve analysis performed? ☐ Yes ☒ No

14. Drilling method used: Rotary ☐ 50; Hollow Stem Auger ☐ 41; Other ☒
Hand Auger

15. Drilling fluid used: Water ☐ 02; Air ☐ 01; Drilling Mud ☐ 03; None ☒ 99

16. Drilling additives used? ☐ Yes ☒ No

Describe ____

17. Source of water (attach analysis, if required):
____

E. Bentonite seal, top ____ ft. MSL or 0 ft.

F. Fine sand, top ____ ft. MSL or ____ ft.

G. Filter pack, top ____ ft. MSL or 4 IN ft.

H. Screen joint, top ____ ft. MSL or 5 IN ft.

I. Well bottom ____ ft. MSL or 30 IN ft.

J. Filter pack, bottom ____ ft. MSL or 30 IN ft.

K. Borehole, bottom ____ ft. MSL or 30 INCH ft.

L. Borehole, diameter 4 in.

M. O.D. well casing 1 5/8 in.

N. I.D. well casing 1 1/4 in.

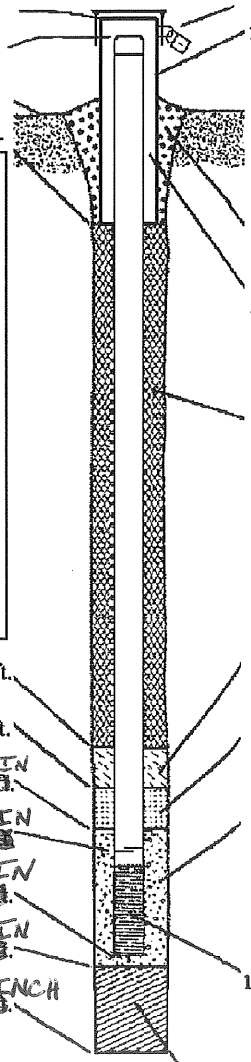

1. Cap and lock? ☐ Yes ☐ No

2. Protective cover pipe:
a. Inside diameter: ____ in.
b. Length: ____ ft.
c. Material: Steel ☐ 04; Other ☐
d. Additional protection? ☐ Yes ☐ No
If yes, describe: ____

3. Surface seal: Bentonite ☒ 30; Concrete ☐ 01; Other ☐

4. Material between well casing and protective pipe: Bentonite ☐ 30; Other ☐
N/A

5. Annular space seal: a. Granular/Chipped Bentonite ☒ 33
b. ____ Lbs/gal mud weight . . . Bentonite-sand slurry ☐ 35
c. ____ Lbs/gal mud weight . . . . . Bentonite slurry ☐ 31
d. ____ % Bentonite . . . . . Bentonite-cement grout ☐ 50
e. ____ Ft^3 volume added for any of the above
f. How installed: Tremie ☐ 01; Tremie pumped ☐ 02; Gravity ☒ 08

6. Bentonite seal: a. Bentonite granules ☐ 33
b. ☐ 1/4 in. ☒ 3/8 in. ☐ 1/2 in. Bentonite chips ☒ 32
c. ____ Other ☐

7. Fine sand material: Manufacturer, product name & mesh size
a. ____
b. Volume added ____ ft^3

8. Filter pack material: Manufacturer, product name & mesh size
a. RW Sidley #10-20
b. Volume added ____ ft^3

9. Well casing: Flush threaded PVC schedule 40 ☐ 23; Flush threaded PVC schedule 80 ☒ 24; Other ☐
____

10. Screen material: Sch. 80 PVC
a. Screen type: Factory cut ☒ 11; Continuous slot ☐ 01; Other ☐
____
b. Manufacturer Monoflex
c. Slot size: 0.010 in.
d. Slotted length: 25 in.

11. Backfill material (below filter pack): None ☒ 14; Other ☐
____

I hereby certify that the information on this form is true and correct to the best of my knowledge.

Signature	Firm
Scott Miller	GESTRA Engineering, Inc.

Please complete both Forms 4400-113A and 4400-113B and return them to the appropriate DNR office and bureau. Completion of these reports is required by chs. 160, 281, 283, 289, 291, 292, 293, 295, and 299, Wis. Stats., and ch. NR 141, Wis. Adm. Code. In accordance with chs. 281, 289, 291, 292, 293, 295, and 299, Wis. Stats., failure to file these forms may result in a forfeiture of between $10 and $25,000, or imprisonment for up to one year, depending on the program and conduct involved. Personally identifiable information on these forms is not intended to be used for any other purpose. NOTE: See the instructions for more information, including where the completed forms should be sent.

Attachment 3

MW-2A Well Development Form

13091-10

State of Wisconsin
Department of Natural Resources

MONITORING WELL DEVELOPMENT
Form 4400-113B Rev. 7-98

Route to: Watershed/Wastewater ☐ Waste Management ☐
Remediation/Redevelopment ☐ Other ☐ _____

Facility/Project Name	County Name	Well Name MW-2A
Facility License, Permit or Monitoring Number	County Code __	Wis. Unique Well Number _____ / DNR Well ID Number ___

1. Can this well be purged dry? ☐ Yes ☒ No

2. Well development method
   - surged with bailer and bailed ☐ 41
   - surged with bailer and pumped ☐ 61
   - surged with block and bailed ☐ 42
   - surged with block and pumped ☐ 62
   - surged with block, bailed and pumped ☐ 70
   - compressed air ☐ 20
   - bailed only ☒ 10
   - pumped only ☐ 51
   - pumped slowly ☐ 50
   - Other _____ ☐

3. Time spent developing well 60 min.

4. Depth of well (from top of well casisng) 5.1 ft.

5. Inside diameter of well 1.25 in.

6. Volume of water in filter pack and well casing ___.__ gal.

7. Volume of water removed from well 1.7 gal.

8. Volume of water added (if any) ___.__ gal.

9. Source of water added _____

10. Analysis performed on water added? ☐ Yes ☐ No
(If yes, attach results)

	Before Development	After Development
11. Depth to Water (from top of well casing)	a. 3.98 ft.	4.25 ft.
Date	b. 04/02/2014 (mm dd yyyy)	04/02/2014 (mm dd yyyy)
Time	c. 2:30 ☐ a.m. ☒ p.m.	4:30 ☐ a.m. ☒ p.m.
12. Sediment in well bottom	___.__ inches	___.__ inches
13. Water clarity	Clear ☐ 10 / Turbid ☒ 15 (Describe) brown, opague	Clear ☒ 20 / Turbid ☐ 25 (Describe) translucent

Fill in if drilling fluids were used and well is at solid waste facility:

14. Total suspended solids	____.__ mg/l	____.__ mg/l
15. COD	____.__ mg/l	____.__ mg/l

16. Well developed by: Name (first, last) and Firm
First Name: Bonnie Last Name: Bills
Firm: GESTRA Engineering, Inc.

17. Additional comments on development:
water cleared considerably

Name and Address of Facility Contact/Owner/Responsible Party
First Name: Scott Last Name: Miller
Facility/Firm: GESTRA Engineering, Inc
Street: 1626 W. Fond du Lac Ave
City/State/Zip: Milwaukee, WI 53205

I hereby certify that the above information is true and correct to the best of my knowledge.
Signature: Scott Miller
Print Name: Scott Miller
Firm: GESTRA Engineering, Inc.

NOTE: See instructions for more information including a list of county codes and well type codes.

Attachment 4

MW-2A Slug Test Report

GESTRA Engineering, Inc
1626 W. Fond du Lac Avenue
Milwaukee, WI 53205
Phone: (414) 933-7444; Fax: (414) 933-7844

Slug Test

Project:	Kenosha Wetland Mitigation Bank	Project no.:	13091-10
Test Date:	April 4, 2014	Boring no.:	MW-2A
ASTM Designation:		Sample no.:	
Description of Soil:	Silty clay loam, dark brown, moist	Depth:	0"-30"
Project Location:	Kenosha, WI	Report to:	

Radius of Well Casing (in):	0.7	1/2 of Diameter of well casing	Diameter of well casing (in)	1.4
Radius of screen & packing (in)	2	1/2 of Diameter of screen plus packing (Bore hole)	Diameter of Bore Hole (in)	4.0
Length of Well screen & packing (in):	27.6	Screened length & any packing above the screen	Is any filter pack above screen joint?	Yes
Depth to Top of Screen (in):	34.8			
Static Water Level (ft)	4.25		Is any screen above static water level?	Yes
Porosity of packing Material:	0.1			
Size of slug (ml)	2600.0		(if yes use relative radius value)	

Static Water Level (ft)	Time Elapsed (sec)
3.15	0
3.48	13
3.60	29
3.72	38
3.81	50
3.89	63
3.94	73
3.99	81
4.02	93
4.06	101
4.10	110
4.11	120
4.13	133
4.15	143
4.17	153
4.19	164
4.19	174
4.19	183
4.20	198
4.21	213
4.21	223
4.21	233
4.21	243
4.22	258
4.22	273
4.23	298
4.23	323
4.23	333
4.23	363
4.24	393
4.24	403
4.25	453
4.25	483

Effective radius

$$r_a = \{(1.0-\eta)r^2 + \eta R^2\}^{1/2}$$

relative radius	r_A	0.91
porosity	h	0.10
Radius of well casing (in)	r	0.7000
Radius of screen and packing (in)	R	2.00

Hvorslev: $$K = \frac{r^2 \ln(L/R)}{2LT_0}$$

Hydraulic Conductivity	K	8.60E-04
Radius of well casing	r	0.91
Length of Well screen & packing (cm):	L	70.1
Time to return to 37% of Static Water Level	T_0	18
Radius of Sceen & packing (cm)	R	5.08

Technician: BJB
Checked By:
Date Checked:

Geotechnical-Structural-Pavement-Construction Material

Attachment 5

Soil Characterization Data Form (Appendix A)

Monitoring Well Installation Data Form (Appendix B)

APPENDIX A. SOIL CHARACTERIZATION DATA FORM

Soil Characterization Data Form

Project Name Kenosha Wetland Mitigation Bank Date 04/02/14
Personnel B. Bills Soil Pit ID MW-2A

Horizon Depths (inches)	Texture	Matrix Color (Munsell moist)	Redoximorphic Features		Induration (none, weak, strong)	Roots
			Color	Abundance		
0"-24"	Silty clay loam	10 yr 2/2			none	trace
24"-30"	loamy Sand with coarse sand	10yr 3/2	light brown red-brown	some	none	trace

Comments:

APPENDIX B. MONITORING WELL INSTALLATION DATA FORM

Monitoring Well Installation Data Form

Project Name Kenosha Wetland Mitigation Bank Date of Installation 04/02/14
Project Location Kenosha Co, WI Personnel B. Bills
Well Identification Code MW 2-A
Attach map of project, showing well locations and significant topographic and hydrologic features.

Characteristics of Instrument:
Source of instrument/well stock Monoflex
Material of well stock Sched 80 Diameter of pipe 1.25"
Slot width 0.010" Slot spacing 1/8"
Kind of well cap in expandable plug Kind of well point/end plug threaded cap
Installation:
Was well installed by augering or driving? hand auger
Kind of filter sand R.W. Sibley #10-20 Kind of bentonite 3/8" chips
Depth to lowest screen slots 30" bgs Riser height above ground 2.58 ft. ags
Was bentonite wetted for expansion? yes
Method of measuring water levels in instrument water level indicator
How was instrument checked for clogging after installation? Purged & developed with bailer

Instrument Diagram[a]	Soil Characteristics					
	Texture	Matrix Color	Redoximorphic Features		Induration (none, weak, strong)	Roots
			Color	Abundance		
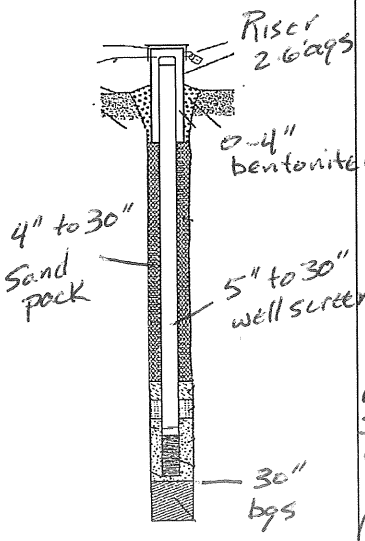	Silty Clay Loam (0-24")	10yr 2/2			None	Trace
	Loamy Sand w/Coarse sand (24"-30")	10yr 3/2	light brown/ red brown	Some	None	trace

[a]Show depths (heights) of riser, well screen, sand pack, and bentonite in relation to soil horizons.

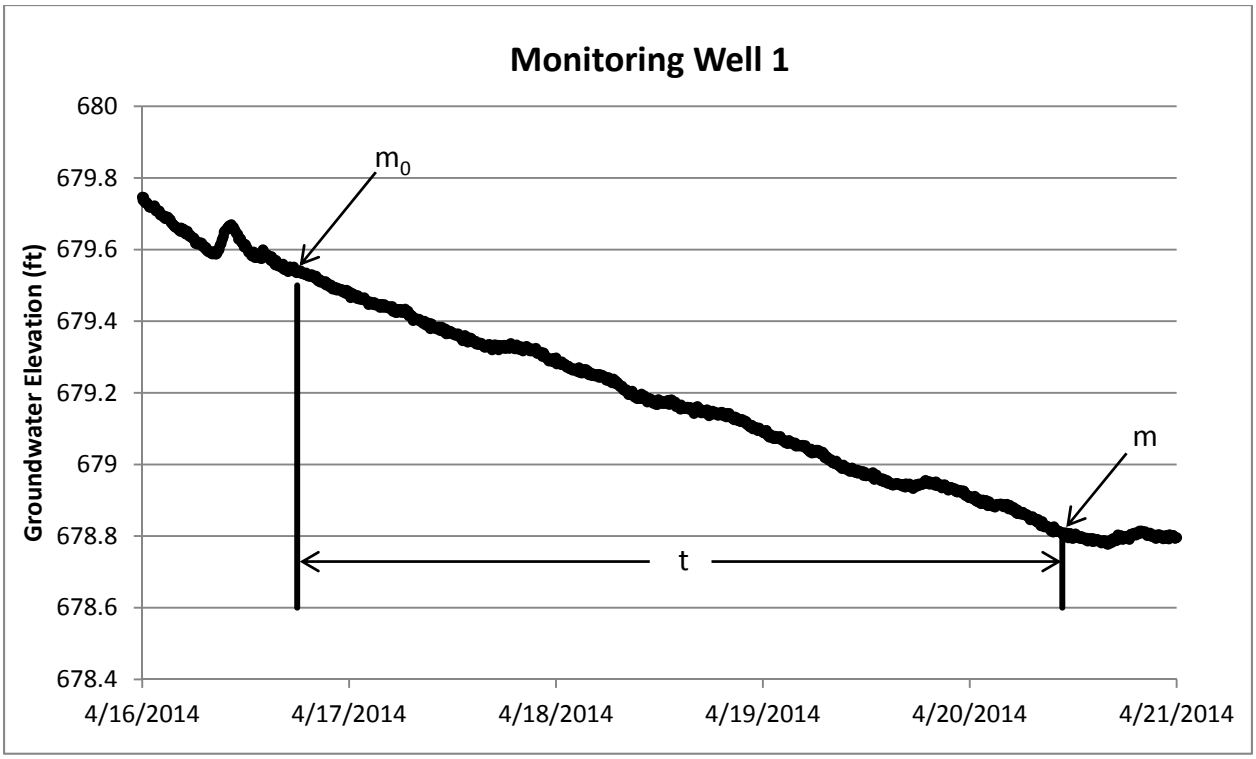

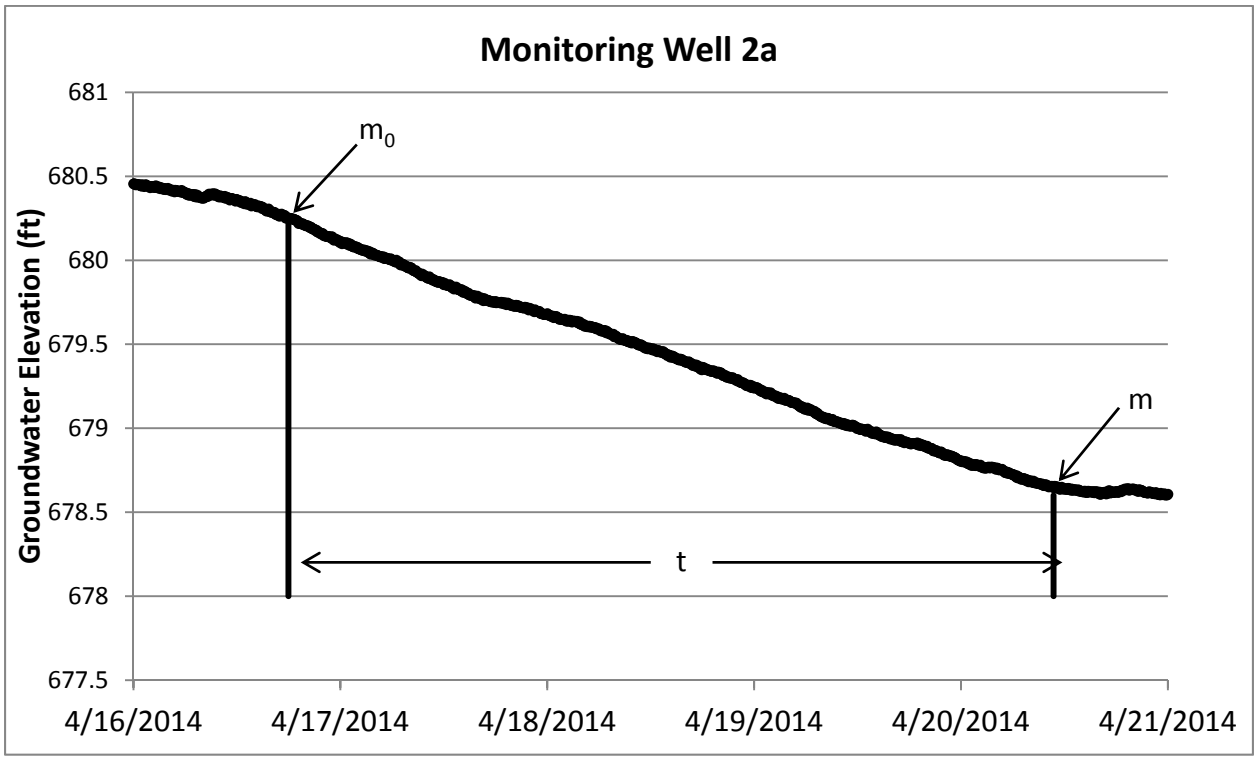

Exhibit D: Groundwater elevation data used for calibration of K. m_0 and m were converted from elevations to heights above the assumed water elevations in the Kilbourn Road Ditch and drain tile for use in the van Schilfgaarde equation.