AGENDA
PUBLIC SAFETY & WELFARE COMMITTEE MEETING
Kenosha Municipal Building - Room 204
Monday, July 14, 2014 - 5:00 pm

Chairman:	**Rocco J. LaMacchia, Sr**	**Vice Chairman:**	**Jack Rose**
Alderperson:	**Kurt Wicklund**	**Alderperson:**	**Scott N. Gordon**
Alderperson:	**Keith W. Rosenberg**		

Call to Order
Roll Call

Approval of the minutes of the meeting held on June 30, 2014 and July 7, 2014.

1. Application for Kenosha Area Chamber of Commerce Foundation for a Carnival License on August 21-23, 2014 in HarborPark. *(District 2)*

2. Mayoral Request for the removal of parking restrictions on 58th Street from Sheridan Rd *(STH 32)* to 8th Avenue. *(District 2) (Staff recommends 90-day trial)*

3. Ordinance by Alderperson Anthony Kennedy - To Repeal and Recreate Subsection 1.025 C *(of the Code of General Ordinances of the City of Kenosha)* Regarding Attire for Members at Meetings of the Common Council.

4. Resolution by Alderperson Anthony Kennedy; Co-Sponsors: Alderperson Jan Michalski and Alderperson Jack Rose - To Urge the Mayor of the City *(of Kenosha)* to Meet with the County Executive and Officers of the Shalom Center and Other Community-Based Entities to Discuss Visions and Strategies to Bring to Fruition a Transitional Shelter that Would Assist Kenoshans from State of Homelessness to a State of Home Dwelling and Direct the Various Departments of the City *(of Kenosha)* to Engage in a Review of Their Respective Assets and Resources to Locate Opportunities to Assist in the Providing of Affordable Housing and the Providing of the Supportive Services.

5. Technical Report regarding floor evaluation at Fire Station #5. *(District 6)*

DISCUSSION ITEM:
1. Update on Fire Station #4 Project

CITIZEN COMMENTS/ALDERPERSON COMMENTS/OTHER BUSINESS AS AUTHORIZED BY LAW PERTAINING TO PUBLIC SAFETY& WELFARE MATTERS AS AUTHORIZED BY LAW

IF YOU ARE DISABLED AND NEED ASSISTANCE, PLEASE CALL 653-4050 BEFORE THIS MEETING

NOTICE IS HEREBY GIVEN THAT A MAJORITY OF THE MEMBERS OF THE COMMON COUNCIL MAY BE PRESENT AT THE MEETING, AND ALTHOUGH THIS MAY CONSTITUTE A QUORUM OF THE COMMON COUNCIL, THE COUNCIL WILL NOT TAKE ANY ACTION AT THIS MEETING.

PUBLIC SAFETY & WELFARE COMMITTEE
Minutes of Meeting held Monday, June 30, 2014

A meeting of the Public Safety & Welfare Committee was held on Monday, June 30, 2014 in Room 204 of the Kenosha Municipal Building. The meeting was called to order at 5:00 pm by Chairman LaMacchia.

At roll call, the following members were present: Alderpersons Wicklund, Rose, Gordon and Rosenberg. Staff members in attendance were: Michael Lemens, Director of Public Works; Dirk Nelson, City Forester; Greg Holverson, Assistant City Engineer; Alderperson Steve Bostrom; Alderperson Curt Wilson; Alderperson Bob Johnson and Alderperson Jan Michalski.

It was moved by Alderperson Gordon, seconded by Alderperson Rosenberg, to approve the minutes from the meeting held on Monday, June 9, 2014. Motion carried unanimously.

1. Previous Trial NB & SB Yield Signs not 70th Street & 35th Avenue but 70th Street & 38th Avenue. *(District 8) (Staff recommends approval)*
   Staff: Michael Lemens spoke.
   It was moved by Alderperson Gordon, seconded by Alderperson Rosenberg, to approve. Motion carried unanimously.

2. Previous Trial to Remove "No Parking" signs on 24th Street from 30th Avenue to approximately 250 feet east. *(District 5) (Staff recommends approval to 130 feet east)*
   Staff: Michael Lemens spoke.
   It was moved by Alderperson Rose, seconded by Alderperson Rosenberg, to approve to amend to 130 ft as recommended. Motion carried unanimously.

DIRECTOR COMMENTS: Michael Lemens introduce the new Assistant City Engineer, Greg Holverson, to the Committee.

ADJOURNMENT - There being no further business to come before the Public Safety & Welfare Committee, it was moved, seconded and unanimously carried to adjourn at 5:04 pm.

PUBLIC SAFETY & WELFARE COMMITTEE
Minutes of Meeting held Monday, July 7, 2014

A special meeting of the Public Safety & Welfare Committee was held on Monday, July 7, 2014 in Room 202 of the Kenosha Municipal Building. The meeting was called to order at 6:38 pm by Chairman LaMacchia.

At roll call, the following members were present: Alderpersons Wicklund, Rose, and Gordon. Aldeperson Rosenberg was excused. Staff members in attendance were: Michael Lemens, Director of Public Works and Shelly Billingsley, Deputy Director of Public Works/City Engineer.

1. Ordinance by Alderperson Scott Gordon, Co-Sponsors Alderpersons Kurt Wickland, David Paff, Rhonda Jenkins, Jack Rose, Eric Haugaard, Patrick Juliana, Jan Michalski, Bob Johnson, Keith Rosenberg, Curt Wilson, and Rocco LaMacchia Sr. – To Renumber Subsection 1.06 Y to 1.06 Z; and to Create Subsection Y *(of the Code of General Ordinances for the City of Kenosha)* Regarding Kenosha Hometown Heroes Commission. *(Oral referral from Council on 6/2/14) (Public Works-Approve-Ayes 6: Noes 0, Parks-Approve-Ayes 5:Noes 0, L/P-Approve-Ayes 5: Noes 0) (Finance-Recommendation Pending)*
   It was moved by Alderperson Gordon, seconded by Alderperson Rose, to approve. Motion carried unanimously.

ADJOURNMENT - There being no further business to come before the Public Safety & Welfare Committee, it was moved, seconded and unanimously carried to adjourn at 6:39 pm.

1

ENGINEERING DIVISION
SHELLY BILLINGSLEY, P.E.
CITY ENGINEER

PARK DIVISION
JEFF WARNOCK
SUPERINTENDENT

FLEET MAINTENANCE
MAURO LENCI
SUPERINTENDENT

STREET DIVISION
JOHN H. PRIJIC
SUPERINTENDENT

WASTE DIVISION
ROCKY BEDNAR.
SUPERINTENDENT

DEPARTMENT OF PUBLIC WORKS
MICHAEL M. LEMENS, P.E., DIRECTOR
SHELLY BILLINGSLEY, P.E., DEPUTY DIRECTOR

MUNICIPAL BUILDING · 625 - 52ND ST · RM 305 · KENOSHA, WI 53140
TELEPHONE (262) 653-4050 · FAX (262) 653-4056
EMAIL PUBLICWORKS@KENOSHA.ORG

July 11, 2014

To: Rocco L. LaMacchia, Sr., Chairman,
Public Works Committee

From: Michael M. Lemens, P.E. 7-11-14
Director of Public Works/City Engineer

Subject: Application for Kenosha Area Chamber of Commerce Foundation for a Carnival License on August 21-23, 2014 in HarborPark. *(District 2)*

BACKGROUND INFORMATION

A request was received in the City Clerk's Office on June 30, 2014 for a carnival license from Kenosha Area Chamber of Commerce Foundation for the Grill Games event. Per the Section 12.03 C. of the City Ordinance, carnival applications shall be approved by the Common Council, following review of the Public Safety & Welfare Committee.

RECOMMENDATION

Staff has no recommendation at this time.

MML/dm

CARNIVAL LICENSE

FILED	6/30
INITIALS	M
ADVERSE/NO ADV	
PS&W	
CC/Mayor	

Type: 124 Fee: $50.00/Event

Date(s) 8/21-23/2014

Hours: 8/21: 5pm-9pm / 8/22: 11-11 / 8/23 11-11

(Chapter 12.03- City of Kenosha, Code of General Ordinances) Applications shall be approved by the Common Council, following review by the Committee on Public Safety & Welfare. See below for approval by Mayor.

1. Corporation/Organization: Kenosha Area Chamber of Commerce Foundation
2. Mailing Address: 600 52nd ST Suite 130 Kenosha, WI 53140
3. Location of Carnival: Celebration Place / Harbor Park Kenosha District# _____
4. Individual in Charge of Event: Lou Molitor
5. Phone: 262 654 1234 x113 Email: lou@kenoshaareachamber.com

(correspondence will be via email if address is given)

READ CAREFULLY BEFORE SIGNING:
A condition of such license shall be the furnishing of a Certificate of Insurance, containing a provision that the City Clerk shall be notified twenty (20) days in advance of the effective date of any termination or cancellation thereof, which Certificate shall indicate that there is, in full force and effect, a policy of public liability insurance and motor vehicle liability insurance for each motor vehicle used in conjunction with the licensed activity, issued by an insurance company licensed to do business in the State of Wisconsin, in the amount of Two Million ($2,000,000.00) Dollars protecting against claims involving death and personal injury, and One Hundred Thousand ($100,000.00) Dollars protecting against claims involving property damage.

I (we) hereby agree to comply with all laws, rules and regulations of the State of Wisconsin and the City of Kenosha. Furthermore, I (we) understand that the Mayor, Building Inspector, Health Administrator, or Fire Chief may suspend operations for 24 hours pending an investigation of any unsafe condition.

Applicant's Signature: Lou Molitor **Date:** 6/27/14
(Individual/Agent of Corporation)

I have received a copy of the NOTICE pertaining to LICENSE/PERMIT APPLICATIONS from the City Clerk's Office _____
(Applicant's Initials)

Approval by the Mayor in the event that there is not a Common Council meeting from the time an application is submitted and prior to the event after consultation with the alderman of the district in which the carnival is to operate.

Mayor: _____ **Date:** _____

Client#: 1887 EDSMAGIC

ACORD™ CERTIFICATE OF LIABILITY INSURANCE

DATE (MM/DD/YYYY) 6/27/2014

THIS CERTIFICATE IS ISSUED AS A MATTER OF INFORMATION ONLY AND CONFERS NO RIGHTS UPON THE CERTIFICATE HOLDER. THIS CERTIFICATE DOES NOT AFFIRMATIVELY OR NEGATIVELY AMEND, EXTEND OR ALTER THE COVERAGE AFFORDED BY THE POLICIES BELOW. THIS CERTIFICATE OF INSURANCE DOES NOT CONSTITUTE A CONTRACT BETWEEN THE ISSUING INSURER(S), AUTHORIZED REPRESENTATIVE OR PRODUCER, AND THE CERTIFICATE HOLDER.

IMPORTANT: If the certificate holder is an ADDITIONAL INSURED, the policy(ies) must be endorsed. If SUBROGATION IS WAIVED, subject to the terms and conditions of the policy, certain policies may require an endorsement. A statement on this certificate does not confer rights to the certificate holder in lieu of such endorsement(s).

PRODUCER
Haas & Wilkerson Insurance
4300 Shawnee Mission Parkway
Fairway, KS 66205
913 432-4400

CONTACT NAME:
PHONE (A/C, No, Ext): 913 432-4400 FAX (A/C, No):
E-MAIL ADDRESS:

INSURER(S) AFFORDING COVERAGE	NAIC #
INSURER A : ACE American Insurance Company	22667
INSURER B :	
INSURER C :	
INSURER D :	
INSURER E :	
INSURER F :	

INSURED
Mr. Ed's Magical Midway LLC;
Duke's Exposition LLC
PO Box 179
North Freedom, WI 53951

COVERAGES CERTIFICATE NUMBER: REVISION NUMBER:

THIS IS TO CERTIFY THAT THE POLICIES OF INSURANCE LISTED BELOW HAVE BEEN ISSUED TO THE INSURED NAMED ABOVE FOR THE POLICY PERIOD INDICATED. NOTWITHSTANDING ANY REQUIREMENT, TERM OR CONDITION OF ANY CONTRACT OR OTHER DOCUMENT WITH RESPECT TO WHICH THIS CERTIFICATE MAY BE ISSUED OR MAY PERTAIN, THE INSURANCE AFFORDED BY THE POLICIES DESCRIBED HEREIN IS SUBJECT TO ALL THE TERMS, EXCLUSIONS AND CONDITIONS OF SUCH POLICIES. LIMITS SHOWN MAY HAVE BEEN REDUCED BY PAID CLAIMS.

INSR LTR	TYPE OF INSURANCE	ADDL INSR	SUBR WVD	POLICY NUMBER	POLICY EFF (MM/DD/YYYY)	POLICY EXP (MM/DD/YYYY)	LIMITS	
A	GENERAL LIABILITY			G23978222	11/11/2013	11/11/2014	EACH OCCURRENCE	$1,000,000
	X COMMERCIAL GENERAL LIABILITY						DAMAGE TO RENTED PREMISES (Ea occurrence)	$100,000
	CLAIMS-MADE X OCCUR						MED EXP (Any one person)	$Excluded
							PERSONAL & ADV INJURY	$1,000,000
							GENERAL AGGREGATE	$2,000,000
	GEN'L AGGREGATE LIMIT APPLIES PER: POLICY PRO-JECT X LOC						PRODUCTS - COMP/OP AGG	$2,000,000
								$
	AUTOMOBILE LIABILITY						COMBINED SINGLE LIMIT (Ea accident)	$
	ANY AUTO						BODILY INJURY (Per person)	$
	ALL OWNED AUTOS / SCHEDULED AUTOS						BODILY INJURY (Per accident)	$
	HIRED AUTOS / NON-OWNED AUTOS						PROPERTY DAMAGE (Per accident)	$
								$
	UMBRELLA LIAB / OCCUR						EACH OCCURRENCE	$
	EXCESS LIAB / CLAIMS-MADE						AGGREGATE	$
	DED / RETENTION $							$
	WORKERS COMPENSATION AND EMPLOYERS' LIABILITY						WC STATU-TORY LIMITS / OTH-ER	
	ANY PROPRIETOR/PARTNER/EXECUTIVE OFFICER/MEMBER EXCLUDED? Y / N	N / A					E.L. EACH ACCIDENT	$
	(Mandatory in NH) If yes, describe under DESCRIPTION OF OPERATIONS below						E.L. DISEASE - EA EMPLOYEE	$
							E.L. DISEASE - POLICY LIMIT	$

DESCRIPTION OF OPERATIONS / LOCATIONS / VEHICLES (Attach ACORD 101, Additional Remarks Schedule, if more space is required)
Additional Insured: The City of Kenosha, WI and Kenosha Area Chamber of Commerce

CERTIFICATE HOLDER

City of Kenosha
625 52nd St, Room 105
Kenosha, WI 53140

CANCELLATION

SHOULD ANY OF THE ABOVE DESCRIBED POLICIES BE CANCELLED BEFORE THE EXPIRATION DATE THEREOF, NOTICE WILL BE DELIVERED IN ACCORDANCE WITH THE POLICY PROVISIONS.

AUTHORIZED REPRESENTATIVE

William R. Wilkerson III

© 1988-2010 ACORD CORPORATION. All rights reserved.

Engineering Division
Shelly Billingsley
Director of Engineering
Fleet Maintenance
Mauro Lenci
Superintendent
Park Division
Jeff Warnock
Superintendent

Street Division
John H. Prijic
Superintendent
Waste Division
Rocky Bednar
Superintendent

DEPARTMENT OF PUBLIC WORKS

Michael M. Lemens, P.E., Director
Shelly Billingsley, P.E., Deputy Director

Municipal Building · 625 52nd ST · RM 305 · Kenosha, WI 53140
Telephone (262) 653-4050 · Fax (262) 653-4056

Date: July 10, 2014

To: Alderperson Rocco LaMacchia, Chairman
Public Safety and Welfare Committee

From: Shelly Billingsley, P.E.
Deputy Director of Public Works / City Engineer

CC: Rhonda Jenkins
Alderperson, District 2

Subject: ***Mayoral Request for the removal of parking restrictions on 58th Street from Sheridan Road (STH 32) to 8th Avenue***

BACKGROUND INFORMATION:

The Mayor requested that Public Works Engineering Staff review the parking restrictions on 58th Street between STH 32 (Sheridan Road) and 8th Avenue. He is requesting that the parking restrictions be eased to allow for more on street parking for this block.

Public Works Engineering Staff reviewed the parking restrictions at this location as shown on Attachment 1.

Currently, this block is governed by Resolution 35-87 which states:
"...both sides of 58th Street, from Sheridan Road to 8th Avenue, be, and hereby are, designated as 'No Parking At Any Time'."

The parking restrictions for the south side of this block of 58th Street, adjacent to the City parking lot, date back to 1943.

RECOMMENDATION:

Staff recommends that the parking restrictions on 58th Street between STH 32 and 8th Avenue be amended to reflect the parking restrictions shown in Attachment 2. Parking shall be restricted on the north side of 58th Street from Sheridan Road east a distance of 130 feet, and parking shall also be restricted on the south side of 58th Street from Sheridan Road east a distance of 95 feet.

A new resolution overturning the previous parking restrictions will be required.

KENOSHA COUNTY INTERACTIVE MAPPING

58th Street Existing Parking Restrictions
From STH 32 (Sheridan Road) to 8th Avenue

N
S

1 inch = 50 feet
Date Printed: 3/25/2014

DISCLAIMER This map is neither a legally recorded map nor a survey and is not intended to be used as one. This drawing is a compilation of records, data and information located in various state, county and municipal offices and other sources affecting the area shown and is to be used for reference purposes only. Kenosha County is not responsible for any inaccuracies herein contained. If discrepancies are found, please contact Kenosha County.

KENOSHA COUNTY INTERACTIVE MAPPING

58th Street Proposed Parking Restrictions
From STH 32 (Sheridan Road) to 8th Avenue

N
S

1 inch = 50 feet
Date Printed: 3/25/2014

DISCLAIMER This map is neither a legally recorded map nor a survey and is not intended to be used as one. This drawing is a compilation of records, data and information located in various state, county and municipal offices and other sources affecting the area shown and is to be used for reference purposes only. Kenosha County is not responsible for any inaccuracies herein contained. If discrepancies are found, please contact Kenosha County.

3

ENGINEERING DIVISION
SHELLY BILLINGSLEY, P.E.
CITY ENGINEER

PARK DIVISION
JEFF WARNOCK
SUPERINTENDENT

FLEET MAINTENANCE
MAURO LENCI
SUPERINTENDENT

STREET DIVISION
JOHN H. PRIJIC
SUPERINTENDENT

WASTE DIVISION
ROCKY BEDNAR.
SUPERINTENDENT

DEPARTMENT OF PUBLIC WORKS
MICHAEL M. LEMENS, P.E., DIRECTOR
SHELLY BILLINGSLEY, P.E., DEPUTY DIRECTOR

MUNICIPAL BUILDING · 625 - 52ND ST · RM 305 · KENOSHA, WI 53140
TELEPHONE (262) 653-4050 · FAX (262) 653-4056
EMAIL PUBLICWORKS@KENOSHA.ORG

July 11, 2014

To: Rocco L. LaMacchia, Sr., Chairman,
Public Safety & Welfare Committee

From: Michael M. Lemens, P.E. 7-11-14
Director of Public Works

Subject: Ordinance by Alderperson Anthony Kennedy – To Repeal and Recreate Subsection 1.025 C Regarding Attire for Members at Meetings of the Common Council.

BACKGROUND INFORMATION

As a request from Alderperson Anthony Kennedy, the Legal Departtment has prepared the following Ordinance to Repearl and Recreate Subsection 1.025 C. of the Code of General Ordinanced Regarding Attire for Members at Meetings of the Common Council.

RECOMMENDATION

Staff has no recommendation.

MML/dm

ORDINANCE NO. _____

SPONSOR: ALDERPERSON ANTHONYKENNEDY

TO REPEAL AND RECREATE SUBSECTION 1.025 C OF THE CODE OF GENERAL ORDINANCES OF THE CITY OF KENOSHA REGARDING ATTIRE FOR MEMBERS AT MEETINGS OF THE COMMON COUNCIL

The Common Council of the City of Kenosha, Wisconsin, do ordain as follows:

Section One: Subsections 1.025 C of the Code of General Ordinances for the City of Kenosha, Wisconsin, is hereby repealed and recreated as follows:

C. Requirement. All members of the Common Council shall wear proper attire to all regular meetings of the Common Council and Committee of the Whole meetings. Business casual is optional attire for regular meetings of the Common Council and for meetings of the Committee of the Whole, during the months of June, July, August, and September. During committee meetings of the Finance Committee, Public Works Committee, Board of Water Commissioners, Storm Water Utility Committee, Public Safety and Welfare Committee, Board of Park Commissioners, and License and Permit Committee, business casual attire shall be worn.

Section Two: This Ordinance shall become effective upon passage and publication.

ATTEST: _____ City Clerk

APPROVED: _____Mayor

Passed:

Published:

Drafted By:
EDWARD R. ANTARAMIAN
City Attorney

ENGINEERING DIVISION
SHELLY BILLINGSLEY, P.E.
CITY ENGINEER

PARK DIVISION
JEFF WARNOCK
SUPERINTENDENT

FLEET MAINTENANCE
MAURO LENCI
SUPERINTENDENT

STREET DIVISION
JOHN H. PRIJIC
SUPERINTENDENT

WASTE DIVISION
ROCKY BEDNAR.
SUPERINTENDENT

DEPARTMENT OF PUBLIC WORKS
MICHAEL M. LEMENS, P.E., DIRECTOR
SHELLY BILLINGSLEY, P.E., DEPUTY DIRECTOR

MUNICIPAL BUILDING · 625 - 52ND ST · RM 305 · KENOSHA, WI 53140
TELEPHONE (262) 653-4050 · FAX (262) 653-4056
EMAIL PUBLICWORKS@KENOSHA.ORG

July 11, 2014

To: Rocco L. LaMacchia, Sr., Chairman,
Public Safety & Welfare Committee

From: Michael M. Lemens, P.E.
Director of Public Works 7-11-14

Subject: Resolution by Alderperson Anthony Kennedy; Co-Sponsors: Alderperson Jan Michalski and Alderperson Jack Rose - To Urge the Mayor of the City *(of Kenosha)* to Meet with the County Executive and Officers of the Shalom Center and Other Community-Based Entities to Discuss Visions and Strategies to Bring to Fruition a Transitional Shelter that Would Assist Kenoshans from State of Homelessness to a State of Home Dwelling and Direct the Various Departments of the City *(of Kenosha)* to Engage in a Review of Their Respective Assets and Resources to Locate Opportunities to Assist in the Providing of Affordable Housing and the Providing of the Supportive Services.

BACKGROUND INFORMATION

As a request from Alderperson Anthony Kennedy, the Legal Department has prepared the following Resolution Urging the Mayor to Meet with the County Executive and Officers of the Shalom Center and Other Community-Based Entities to Discuss Visions and Strategies to Bring to Fruition a Transitional Shelter that Would Assist Kenoshans from State of Homelessness to a State of Home Dwelling and Direct the Various Departments of the City to Engage in a Review of Their Respective Assets and Resources to Locate Opportunities to Assist in the Providing of Affordable Housing and the Providing of the Supportive Services.

RECOMMENDATION

Staff has no recommendation.

MML/dm

RESOLUTION NO. _____

SPONSOR: **ALDERPERSON ANTHONY KENNEDY**

CO-SPONSORS: **ALDERPERSON JAN MICHALSKI**
ALDERPERSON JACK ROSE

TO URGE THE MAYOR OF THE CITY OF KENOSHA TO MEET WITH THE COUNTY EXECUTIVE AND OFFICERS OF THE SHALOM CENTER AND OTHER COMMUNITY-BASED ENTITIES TO DISCUSS VISIONS AND STRATEGIES TO BRING TO FRUITION A TRANSITIONAL SHELTER THAT WOULD ASSIST KENOSHANS FROM STATE OF HOMELESSNESS TO A STATE OF HOME DWELLING AND DIRECT THE VARIOUS DEPARTMENTS OF THE CITY OF KENOSHA TO ENGAGE IN A REVIEW OF THEIR RESPECTIVE ASSETS AND RESOURCES TO LOCATE OPPORTUNITIES TO ASSIST IN THE PROVIDING OF AFFORDABLE HOUSING AND THE PROVIDING OF THE SUPPORTIVE SERVICES

WHEREAS, people experiencing chronic homelessness are vulnerable and the most likely to die on the streets of our communities; and

WHEREAS, safe and decent shelter is one of the most basic of all human needs; and

WHEREAS, inadequate housing and homelessness make it more difficult for children to learn, adults to be productive, and people of all ages to stay healthy; and

WHEREAS, the lack of adequate and affordable housing is being felt by individuals of all ages and income levels in City of Kenosha and Kenosha County; and

WHEREAS, every American deserves a decent home in a suitable living environment with adequate financial stability to maintain it; and

WHEREAS, lack of affordable housing and homelessness represent an economic burden on the community, especially the public safety and public health systems; and

WHEREAS, local communities are on the front lines of the response to chronic homelessness; and

WHEREAS, in order for persons experiencing chronic homelessness to succeed in their housing, supportive services are necessary to mitigate health, substance abuse, and mental health problems, which supportive services are frequently delivered through temporary or transitional shelter facilities; and

WHEREAS, many government agencies, non-profit entities and individuals, including, but not limited to the Shalom Center, are valiantly working to address shelter issues in the City of Kenosha and Kenosha County; and

WHEREAS, the U.S. Department of Housing and Urban Development in the Third Annual Homeless Assessment Report released in July 2008 reported a 30 percent reduction in chronic homelessness, from 175,914 in 2005 to 123,833 in 2007; and

WHEREAS, these reductions in chronic homelessness are the direct result of coordinated community response by public and private entities to address issues of providing affordable housing and providing the supportive services necessary to mitigate health, substance abuse, and mental health problems, which are delivered through temporary or transitional shelter facilities; and

WHEREAS, these reductions in chronic and street homelessness are improving the quality of life for everyone in the community, housed and homeless alike, and

WHEREAS, the opportunities(?)and responsibility to help solve homelessness in the City of Kenosha and in the Kenosha County must derive from a multi-level, multi-jurisdictional approach including all stakeholders in the community including but not limited to the City of Kenosha, Kenosha County and Community-based non profit entities.

NOW THEREFORE, BE IT RESOLVED, by the Common Council for the City of Kenosha, to urge the Mayor of the City of Kenosha to meet with the County Executive and

Officers of the Shalom Center and other community-based entities to discuss visions and strategies to bring to fruition a Transitional Shelter that would assist Kenoshans from state of homelessness to a state of home dwelling.

BE IT FURTHER RESOLVED, that the various departments of the City of Kenosha are directed to engage in an exhaustive review of their respective assets and resources to locate opportunities to assist in the providing of affordable housing and the providing of the supportive services necessary to mitigate health, substance abuse, and mental health problems, which are delivered through temporary or transitional shelter facilities..

BE IT FURTHER RESOLVED, that the City Clerk is directed to send a copy of this Resolution to the County Executive and the Director of the Shalom Center.

Adopted this_____day of _____, 2014.

ATTEST:_____City Clerk

APPROVED:_____Mayor

Date:_____

Drafted By:
ALDERPERSON ANTHONY KENNEDY
ALDERPERSON JAN MICHALSKI

Reviewed By:
EDWARD R. ANTARAMIAN
City Attorney

5

ENGINEERING DIVISION
SHELLY BILLINGSLEY, P.E.
CITY ENGINEER

PARK DIVISION
JEFF WARNOCK
SUPERINTENDENT

FLEET MAINTENANCE
MAURO LENCI
SUPERINTENDENT

STREET DIVISION
JOHN H. PRIJIC
SUPERINTENDENT

WASTE DIVISION
ROCKY BEDNAR
SUPERINTENDENT

DEPARTMENT OF PUBLIC WORKS
MICHAEL M. LEMENS, P.E., DIRECTOR
SHELLY BILLINGSLEY, P.E., DEPUTY DIRECTOR

MUNICIPAL BUILDING · 625 - 52ND ST · RM 305 · KENOSHA, WI 53140
TELEPHONE (262) 653-4050 · FAX (262) 653-4056
EMAIL PUBLICWORKS@KENOSHA.ORG

July 11, 2014

To: Rocco LaMacchia, Sr., Chairman
Public Safety & Welfare

From: Shelly Billingsley, P.E. Shelly Billingsley
Deputy Director of Public Works / City Engineer

Cc: Dave Paff
District 6

Subject: ***Technical Report regarding floor evaluation at Fire Station #5***

BACKGROUND INFORMATION

Staff has received the report from Graef regarding the floor evaluation for Fire Station #5. The report has evaluated all of the areas that will need repair and staff is working with the consultant upon approval of this report to complete the plans and specifications to bid out the repairs to qualified contractors. Additional work is being requested to determine the size and placement of reinforcement for shear capacity to accommodate increased weight of fire vehicles and changes in concrete code which will be budgeted for in a future year.

RECOMMENDATION

Staff recommends approval of technical report regarding the floor evaluation of Fire Station #5.

One Honey Creek Corporate Center
125 South 84th Street, Suite 401
Milwaukee, WI 53214-1470
414 / 259 1500
414 / 259 0037 fax
www.graef-usa.com

DRAFT

GRAEF

collaborāte / formulāte / innovāte

FOR APPROVAL

July 11, 2014

Deputy Chief John Poltrock
City of Kenosha, Fire Administration
Municipal Building
625 52nd Street
Kenosha, WI 53140

SUBJECT: Fire Station 5 Floor Evaluation

Dear John:

As requested, GRAEF performed an evaluation of the structural elements of the apparatus floor at Fire Station 5 located at 2125 Washington Road in Kenosha Wisconsin. The purpose of the evaluation was to provide repair direction for the concrete floor and to verify the capacity of the floor system to support the current equipment. This report presents the results of this evaluation.

Background

The fire station was designed in 1953 (Photo 1). This apparatus floor structure is cast-in-place reinforced concrete consisting of a one way slab on beams and girders. The beams are two span continuous beams supported on the girders and the exterior walls. The girders are four span continuous beams supported on interior concrete columns and the exterior walls.

The City of Kenosha Fire Administration contacted GRAEF and Giles Engineering in February 2014 to evaluate an area of deteriorated concrete near a floor drain on the apparatus floor (Photo 2). The scope of the evaluation, analysis and repair recommendations included:

- A field investigation to identify delaminated areas of concrete and cracks in the concrete
- Evaluation of the effects of the deterioration and cracking on the structural system
- Structural analysis of the floor framing's ability to support the current vehicle loads
- Repair details describing the repair work to be performed in deteriorated areas

The structural design and detailing of any strengthening measures resulting from the structural analysis were not part of the scope of work for this evaluation.

Photo 1: Fire Station 5

Photo 2: Deteriorated Concrete at Floor Drain

Field Investigation

Giles Engineering performed sounding on the top and bottom faces of the apparatus floor, including the slabs, beams and girders. Areas with delaminated or spalled concrete were located on a floor plan of the building. The delaminated areas on the underside of the floor were also marked directly on the surface (Photo 3). The Giles report, including the diagrams of delaminated concrete, can be found attached in Appendix A.

Giles also marked cracks on the underside of the floor (Photo 4). The cracks were marked with a crayon and appear much larger in this photograph than they actually are. GRAEF then evaluated the location, size and concentrations of the cracks to determine if the cracks were indications of structural overload. The cracks were also correlated to the results of the structural analysis of the floor system.

The areas with delaminated or spalled concrete appear to be caused by water infiltrating the concrete and corroding the steel reinforcing bars. When steel corrodes, it expands to up to 10 times its original volume. This expansion causes the area of concrete near the steel to debond from the surrounding concrete. These debonded areas are called “delaminations”. When the delaminated area completely separates from the base concrete, that loose concrete is called a “spall”. Until the deteriorated areas are repaired, the delaminated and spalled concrete weakens the structural member and allows further deterioration of the steel and the concrete.

Some of the cracks in the slabs are related to water infiltration and deterioration of the steel and concrete. These cracks are located in the areas of the slab deterioration. The cracks may be a result of the water infiltration, or the water may be infiltrating the slab at these locations through the crack. In either case, these cracks are not detrimental to the structural strength at their current size and configuration.

The rest of the cracks are concentrated in the northwest end of the apparatus bay where the vehicles most often enter and exit the building. The crack sizes and configurations are consistent with those anticipated from wheel loading on this particular type of structural system. The cracks are generally very small in width. None of the cracks are wide enough to pose a structural concern at this time.

It is normal and expected that reinforced concrete will crack under load. When load is placed on concrete, it causes the concrete to go into tension in certain areas of the structural system. Concrete easily cracks when it is put into tension. Once the concrete cracks, the steel reinforcing bars are engaged. The steel reinforcing is intended to provide the tension

support in a reinforced concrete system. The small widths of the cracks in this floor system are telling us that the steel is performing as intended.

Photo 3: Delaminations Marked on Underside of Floor

Photo 4: Cracks Marked on Underside of Floor

Structural Analysis

We performed a structural analysis of the floor system to determine whether the floor has the capacity to support the vehicles that are currently used at this station. The original structural drawings were available to aid in this analysis. According to the drawings, the apparatus floor was designed to support the worst case of 175 pounds per square foot (psf) or an 18,000 pound axle load.

Two vehicles are permanently housed at this station and are located on the northwest side of the building (See Figure 1):

- Medical Vehicle M5 with 9,000 lbs front axle and 12,000 lbs rear axle
- Fire Engine E5 with 15,000 lbs front axle and 23,000 lbs rear axle

At times, Fire Engine E55 also occupies a bay on the southeast side of the building. Fire Engine E55 has a 15,000 lbs front axle and 20,000 lbs rear axle. Other vehicles may occuy this bay at other times as well. Our analysis was based on the configuration of vehicles shown in Figure 1.

The overall weight of the vehicles in the building is well below the 175 psf total load for which the floor was originally designed. However, the maximum axle load of the current vehicles (23,000 lbs) is 28% higher than the axle load from the original design (18,000 lbs).

Two types of analyses were performed. The first type of analysis calculates the stresses from the original design loads and compares that to the stresses from the current vehicle loads. The actual capacity of the system is not considered in this analysis. In this analysis, we determined the stresses in the members that would be incurred by the original design loads of 175 psf and 18,000 lbs and compared them to the stresses incurred by the current vehicle loads. In this structure, the original design produced higher stresses for both flexure and shear in all but one condition. And in that one condition, the current loading caused a shear stress increase of less than 1%. Based on the 2009 International Existing Building Code, new loading may cause a stress increase of up to 5% without requiring strengthening. By this first type of analysis, the current vehicle loads on the floor are acceptable without any reinforcing.

The second type of analysis compared the calculated capacity of the floor system and the stresses from the current vehicle loads. In this analysis, the system is acceptable if the calculated capacity is higher than the stresses from the loading. We found that the flexural (bending) capacity of the system was in the same range as the stresses from the current vehicle loads. We believe that the flexural capacity of the floor system is adequate for the vehicles currently used at this station.

The second analysis also compared the shear capacity to the stresses from the current vehicle loads. This analysis showed that the shear capacity of the slab is acceptable. However, the shear capacity of the beams and girders is significantly lower than the stresses from the current vehicles at certain locations.

This raises the question of why the capacity of the beans and girders is so much lower than that required by the analysis. Some of this difference may be attributed to changes in the concrete code. Most of this difference appears to be due to the way that the loads were applied during the original design. It appears that the floor was mostly designed with the 175 psf criteria. That design may have been supplemented with the load from only one vehicle with an 18,000 lbs axle load rather than two vehicles which is how the building is currently used. The loading from the current vehicles creates higher concentrations of loads, particularly on the girders. This is causing the discrepancy between the capacity of the floor system and the current loading.

We feel that addressing the low shear capacity is important to ensure a safe structural support for these vehicles. There are three main reasons that we feel this is important. First, much more is known today about shear failures in concrete than was known in the 1950's and the concrete code has been adjusted to consider this. These are important advances in structural engineering that should be taken into consideration. Second, a shear failure in a beam or girder can occur as an abrupt failure with little early warning that would allow someone to identify the problem and move the vehicles. And third, the type of loading that occurs with vehicle is particularly likely to cause shear failures.

We recommend strengthening certain areas of the girders and beams to ensure that the floor will continue to safely support the M5 and E5 vehicles.

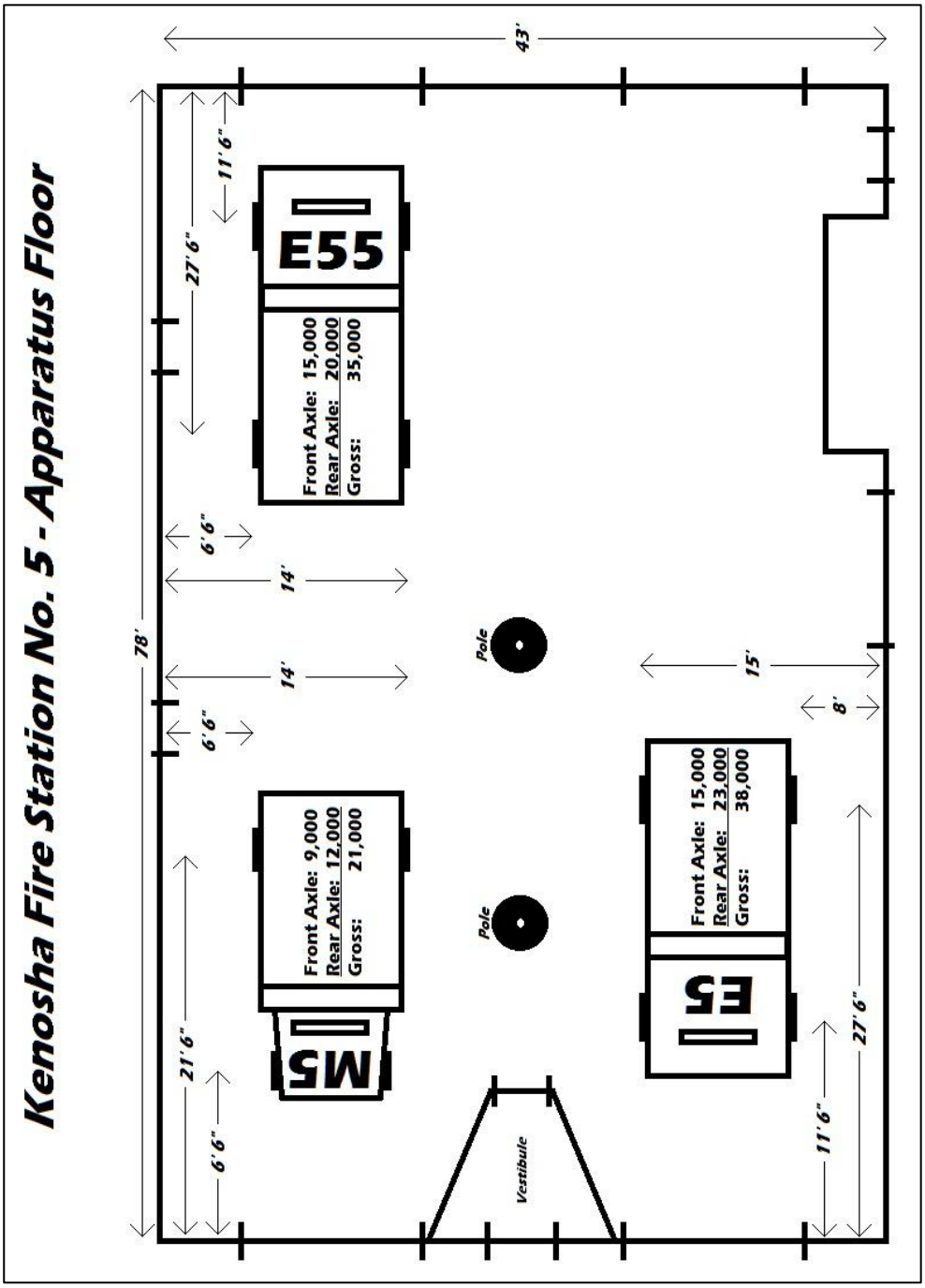

Figure 1: Vehicles on Apparatus Floor (Bottom of Diagram is Northwest Wall)

Repair Recommendations

Areas of the floor system with delaminated or spalled concrete should be repaired with standard chip and patch types of repairs. This involves removing unsound concrete, replacing steel reinforcing bars if they have lost more than 20% of their area due to corrosion, and patching the concrete with a high quality repair mortar. Details and technical specifications for these repairs are included in Appendix B. The areas to be repaired are found in the Giles Engineering report in Appendix A.

Once the concrete structure has been repaired, the top side of the apparatus floor should be protected with a waterproof coating. This will prolong the life of the floor system by creating a barrier for water and salts so that the steel reinforcing does not corrode again soon. The contractor who is installing the membrane should verify that the floor is properly prepared to accept the coating and that it is compatible with the previously applied coating.

The next step after repairing the floor system and applying the waterproof coating is to reinforce the beams and girders for the current loading. The shear reinforcing for the beams and girders should be designed and detailed in a further study of this area of the floor. If it is important to keep the basement areas clear, this reinforcing would likely be accomplished by installing Fiber Reinforced Polymers (FRP) epoxied to the structural members in the critical areas of the floor. Another option for addressing the shear capacity is to add a series of columns and footings below the beams and girders in the basement. If maintaining the basement space is not a priority, this is may be a more cost effective solution. An analysis of various reinforcing options would provide the information needed to determine the best retrofit option for this building. The scope of this initial study and report covered repairs due to deterioration, and the structural analysis to determine whether any strengthening was needed based on this analysis.

We understand that the costs of doing the beam and girder reinforcing may be higher than the current budget allows. It should be understood that there is a risk to postponing the reinforcing work. As was previously discussed, the beams have a risk of failing due to the loads from the vehicles. If the beams were to fail, the failure would likely be abrupt, not giving warning before it happened. On the other hand, clearly, the floor has been used to this point without this failure occurring. The City should understand that there is a risk to using the floor for the vehicles without reinforcing the beams and that the longer the reinforcing waits, the longer that risk remains.

Report Limitations

This report is based on conditions of elements that were readily observable at the time of assessment. No testing other than sounding was performed. This evaluation was intended to be an evaluation of the visible structural elements of the apparatus floor. It was not intended to address every deficiency that could be found in structures such as this. GRAEF does not accept responsibility for deficiencies not evident during an investigation of this type. Conditions observed at the time of assessment may change if noted deficiencies are not corrected.

We appreciate the opportunity to be of service on this project. Please feel free to call with any comments or questions.

Sincerely,

Eileen McEnroe Hankes

Eileen McEnroe Hankes, P.E.
Structural Engineer/Project Manager

L:\Jobs2014\20140024\Project_Information\Reports\Kenosha Fire Report - July 11 2014.docx

Enclosures: Appendix A and Appendix B

Appendix A

GILES ENGINEERING ASSOCIATES, INC.

-GEOTECHNICAL, ENVIRONMENTAL AND CONSTRUCTION MATERIALS CONSULTANTS-

- ■ N8 W22350 Johnson Drive, Suite A1 / Waukesha, WI 53186 / (262) 544-0118 / Fax: (262) 549-5868
- □ 1965 N. Main Street / Orange, CA 92865 / (714) 279-0817 / Fax: (714) 279-9687
- □ 514 Progress Drive, Suite J / Linthicum, MD 21090 / (410) 636-9320 / Fax: (410) 636-9325
- □ 10553 Olympic Drive, Suite 102 / Dallas, TX 75220 / (214) 358-5885 / Fax: (214) 358-5884
- □ 5425 Peachtree Parkway / Norcross, GA 30092-6536 / (678) 906-4031 / Fax: (678) 906-4032

DAILY FIELD MONITORING REPORT			
CLIENT	GRAEF 125 South 84th Street, Suite 401 Milwaukee, WI 53214	**PROJECT**	Fire Station #5 2125 Washington Road Kenosha, WI
DATE	March 11, 2014	**PROJECT NO.**	1M-1401033-1
WEATHER	Indoors	**FIELD REP.**	Don Goebel and Dave Drow

NON-DESTRUCTIVE CONCRETE SOUNDNESS TESTING

As requested, our representative reported to the above referenced site to perform chain dragging and sounding to detect areas of delamination for the apparatus room slab and support beams of the existing structure.

Chain dragging and hammer sounding was performed on the upper surface of the existing elevated slab to detect areas of delamination. Observations indicated areas of delamination as shown on attached sketch A (using the drawings provided by the City of Kenosha). These were generally located in the northeast quadrant of the apparatus room, but several isolated areas were also found in the west half of the room. Due to the surface treatment cracking was not observed except along the elongated area of delamination extending from the northeast overhead door to the eastern drain.

Hammer sounding was performed on the bottom surface of the elevated slab and on the support beams to detect areas of delamination. Observations indicated areas of delamination as shown on attached sketch B. The majority of the area that was found to be delaminated was again in the northeast quadrant. Other isolated areas were also found in the other quadrants. Delamination was not found in the beams. Cracking was observed in areas were delamination was found. Numerous cracks unassociated with delamination were observed in the northeast quadrant and in the north half of the northwest quadrant.

Locations and elevations of tests were assessed in accordance with the accuracy and proximity of provided survey control. Unless otherwise noted, the test locations and elevations were assessed by pacing and hand-level methods.

We make no warranty, express or implied, except that our services were performed in accordance with engineering principles generally accepted at this time and in this location.

REVIEWING ENGINEER: Steven P. Homar, P.E.

LOCATION SKETCH FOR DELAMINATION

[TOP SIDE]

A

CENTER & SOUTH DRAINS ARE NOT IN LOCATION SHOWN ON PLAN. DRAINS ARE 2 to 3 FT NORTH OF PLAN LOCATION - MOVED POSSIBLY TO AVOID DRAINS ATOP BEAMS

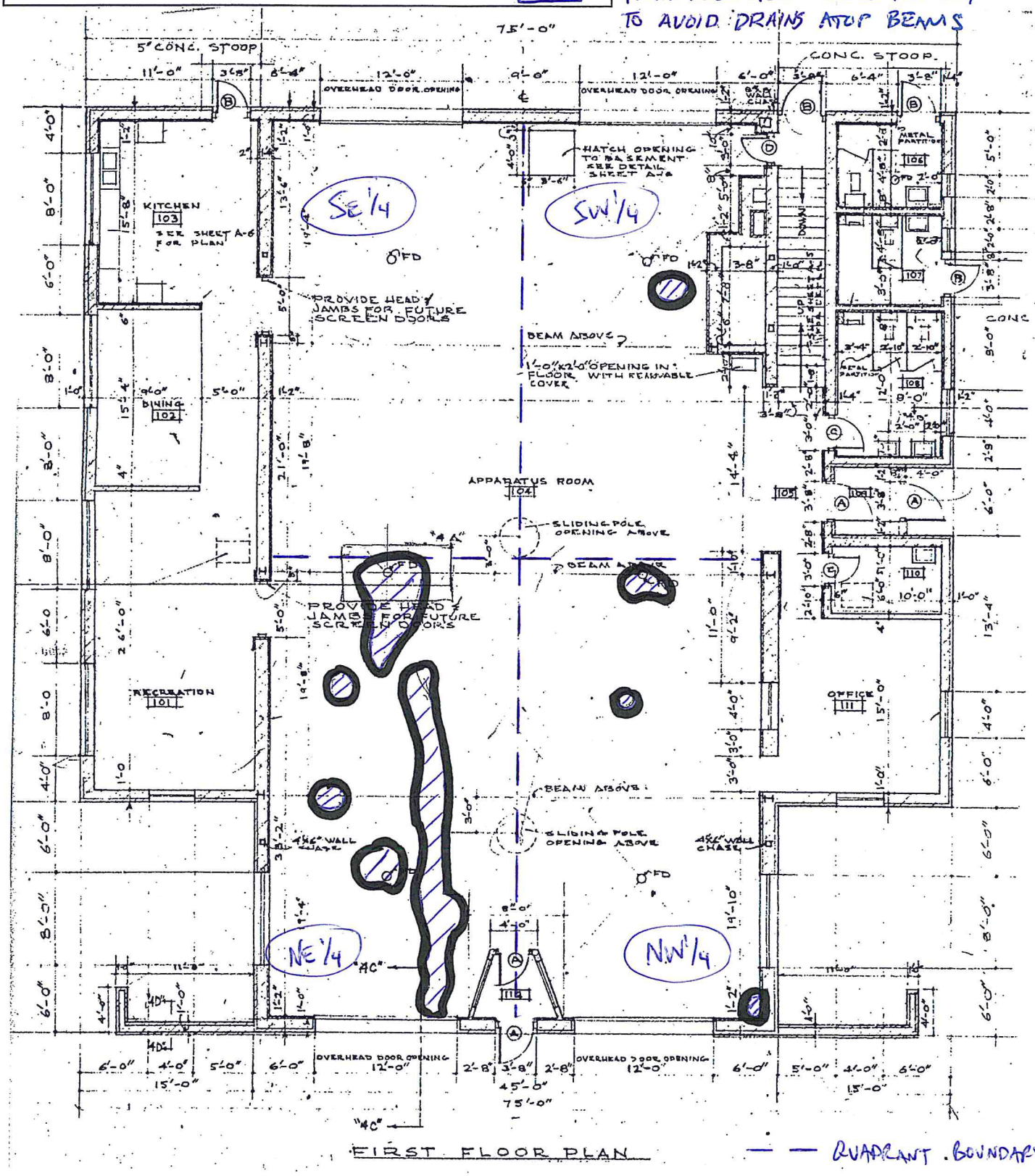

Project: Fire Station #5 2125 Washington Road Kenosha, WI	Client: GRAEF 125 South 84th Street, Suite 401 Milwaukee, WI

Giles Project No.: 1M- 1401033	NOT TO SCALE LOCATIONS APPROXIMATED	Date: 3-11-14

LOCATION SKETCH FOR DELAMINATION

[UNDER SIDE]

B

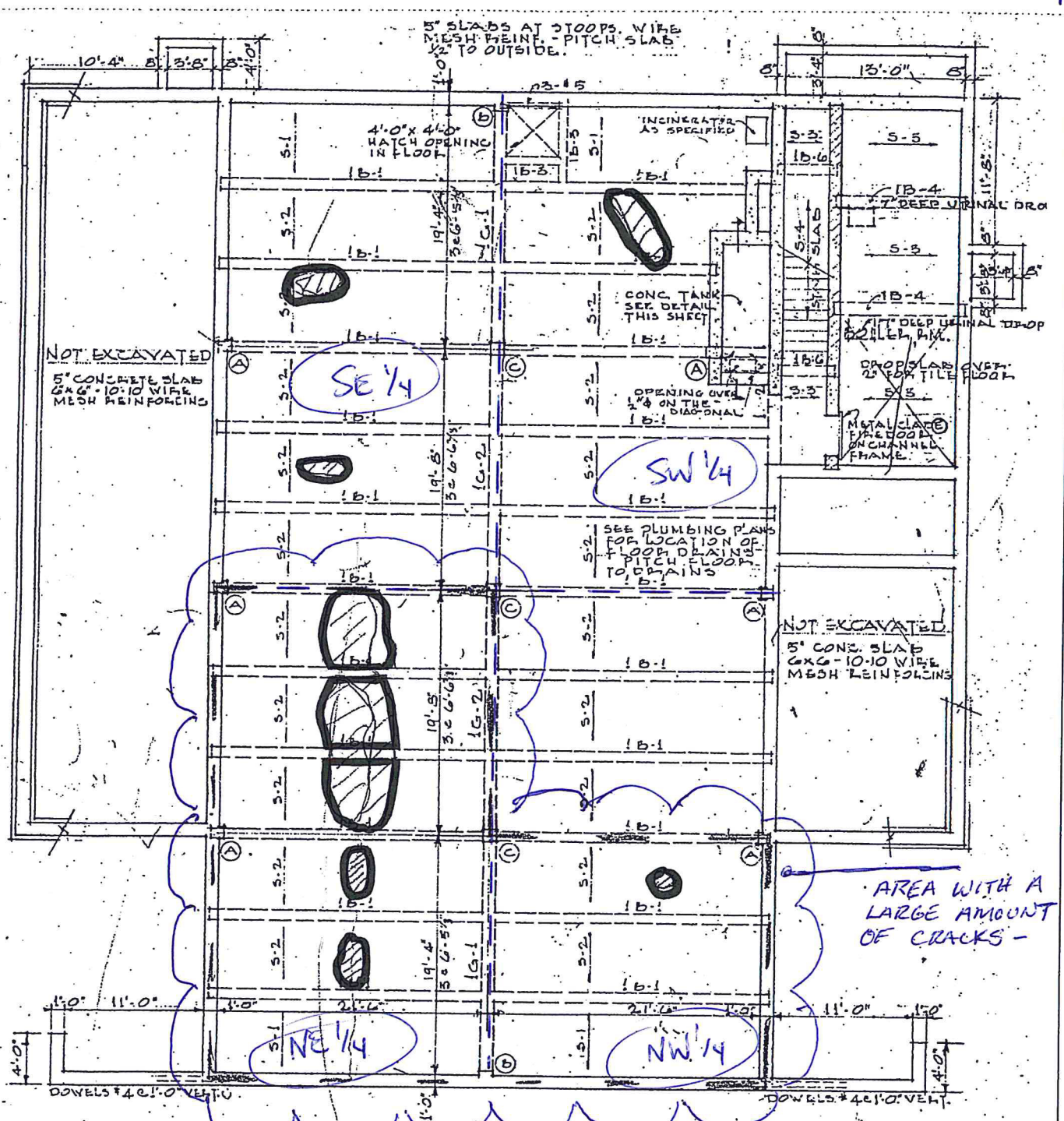

Project: Fire Station #5 2125 Washington Road Kenosha, WI	Client: GRAEF 125 South 84th Street, Suite 401 Milwaukee, WI	
Giles Project No.: 1M- 1401033	NOT TO SCALE LOCATIONS APPROXIMATED	Date: 3-11-14

Appendix B

One Honey Creek Corporate Center
125 South 84th Street, Suite 401
Milwaukee, WI 53214-1470
414 / 259 1500
414 / 259 0037 fax
www.graef-usa.com

GRāEF

collaborāte / formulāte / innovāte

APPARATUS FLOOR REPAIRS
KENOSHA FIRE DEPARTMENT
STATION 5

Project Scope Description

1. Work shall be performed on the apparatus floor, both topside and underside. See attached plan for extents of work.

2. Perform concrete repairs in areas of deterioration. See Giles report in Appendix A for extents of delaminated concrete. Perform concrete repairs in conformance with attached Details 1 - 6 and Specification Section 03 01 07 - Concrete Restoration.

3. Apply epoxy coating on apparatus floor. Install coating in accordance with manufacturer's written instructions.

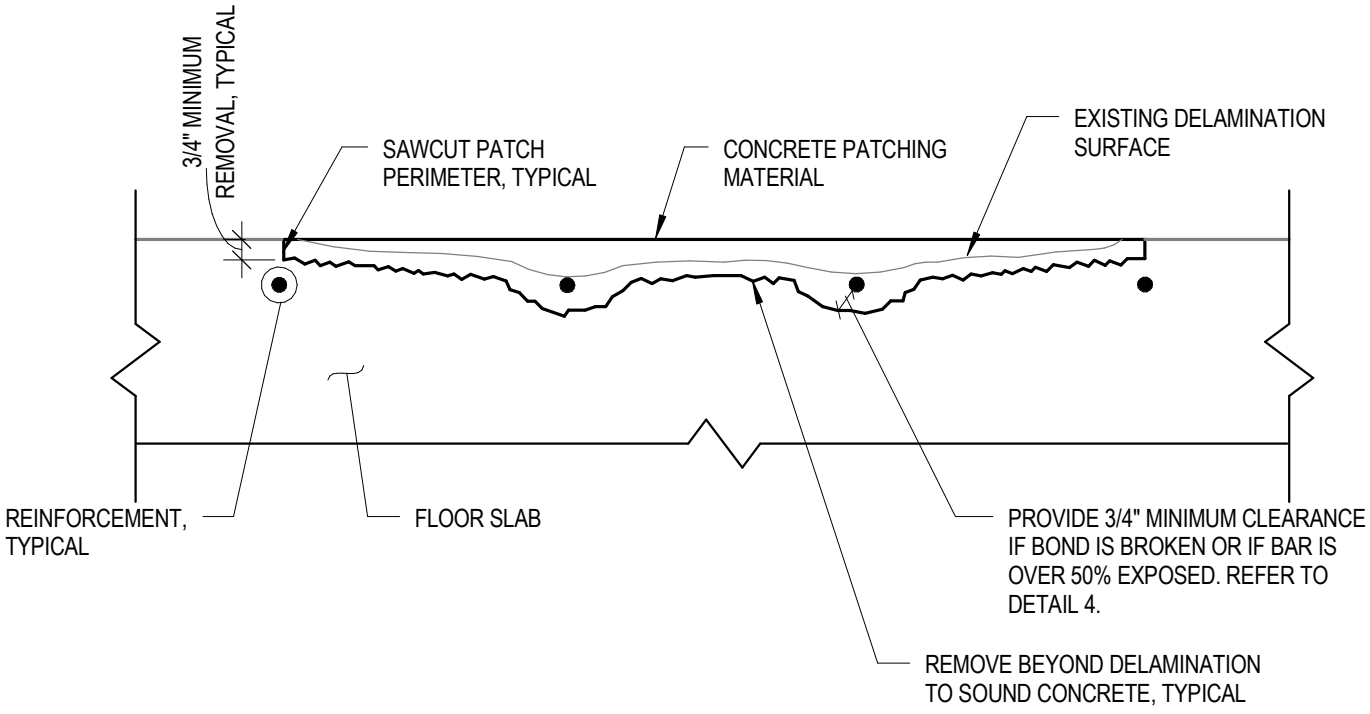

GRäEF

TYPICAL TOPSIDE SPALL REPAIR

DETAIL 1

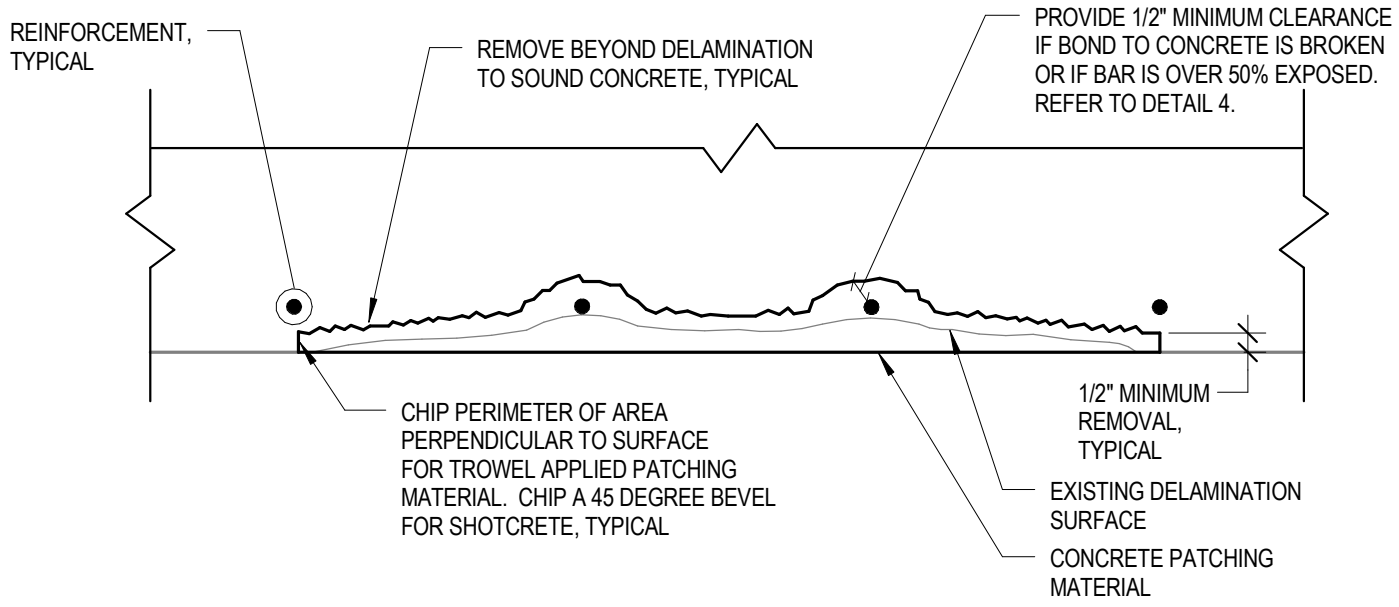

GRäEF

TYPICAL UNDERSIDE SPALL REPAIR

DETAIL 2

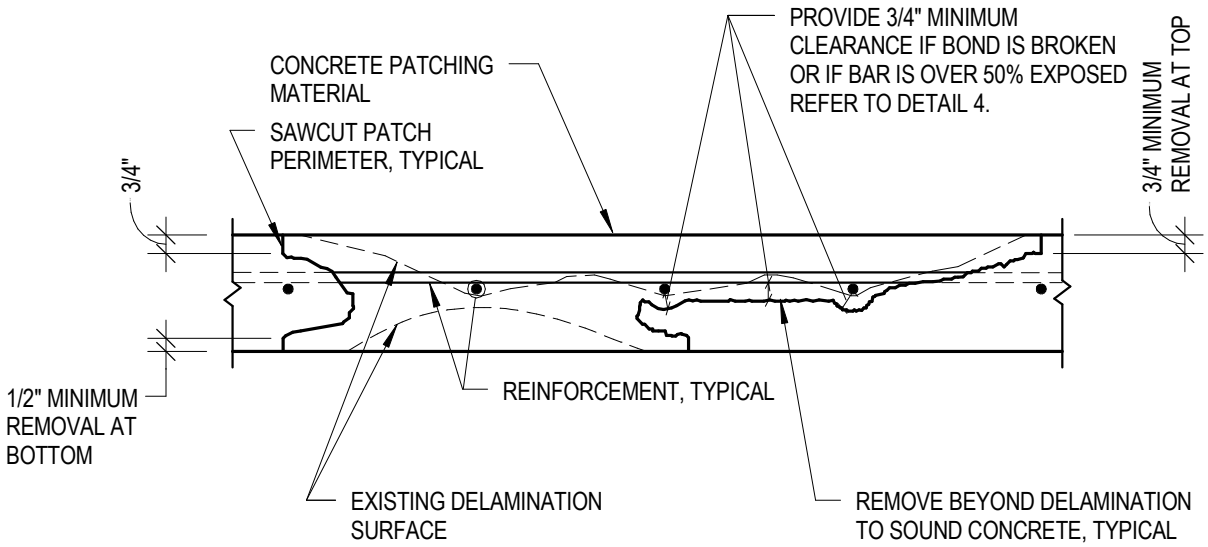

GRäEF

TYPICAL FULL DEPTH SLAB REPAIR **DETAIL 3**

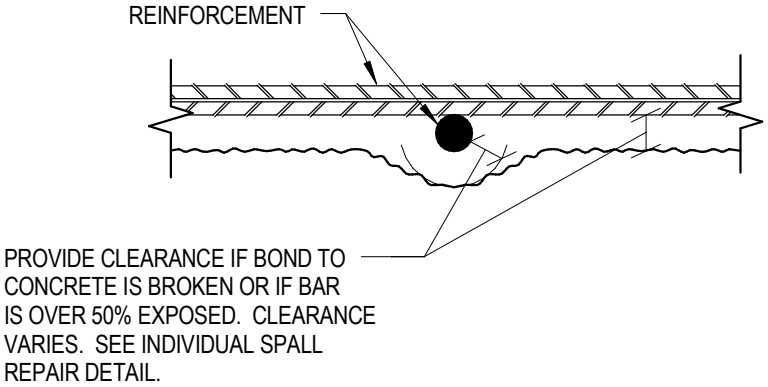

GRäEF

TYPICAL REBAR CLEARANCE

DETAIL 4

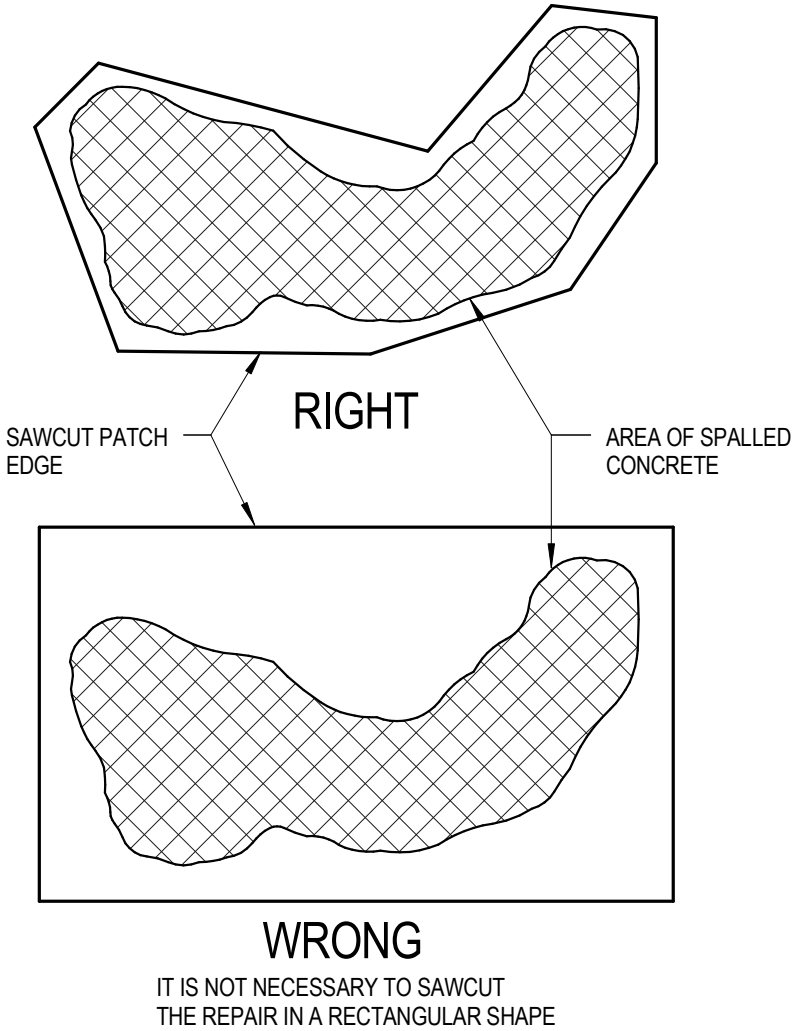

GRäEF

TYPICAL SPALL AREA

DETAIL 5

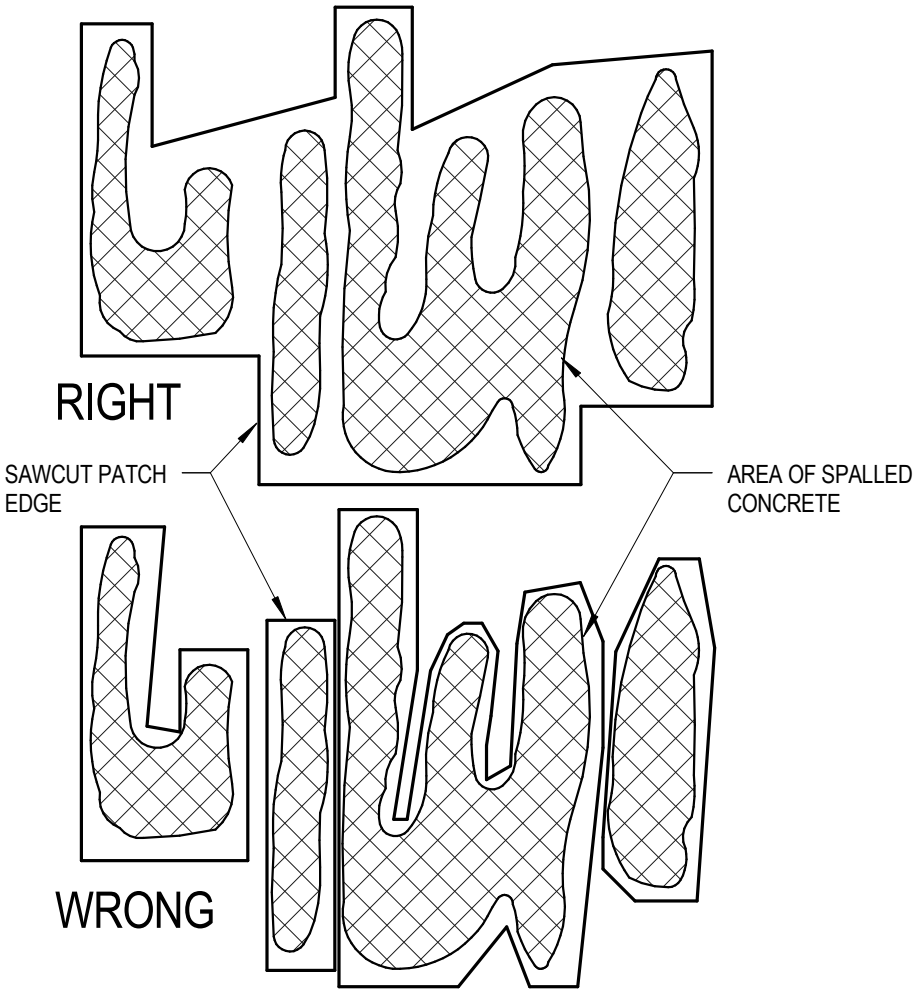

IT IS BETTER TO REMOVE LONG, NARROW AREAS OF UNSPALLED CONCRETE AND INCLUDE THEM IN THE PATCHED AREA.

SECTION 03 01 07

CONCRETE RESTORATION

PART 1 GENERAL

1.1 SUMMARY

A. Section Includes:
1. Concrete surface repair.

1.2 REFERENCES

A. ASTM International (ASTM):
1. ASTM A82 - Standard Specification for Steel Wire, Plain, for Concrete Reinforcement.
2. ASTM A615 - Standard Specification for Deformed and Plain Carbon-Steel Bars for Concrete Reinforcement.
3. ASTM A996 - Standard Specification for Rail-Steel and Axle-Steel Deformed Bars for Concrete Reinforcement.
4. ASTM C33 - Standard Specification for Concrete Aggregates.
5. ASTM C109 - Standard Test Method for Compressive Strength of Hydraulic Cement Mortars (Using 2-in. Cube Specimens).
6. ASTM C150 - Standard Specification for Portland Cement.
7. ASTM C260 - Standard Specification for Air-Entraining Admixtures for Concrete.
8. ASTM C293 - Standard Test Method for Flexural Strength of Concrete (Using Simple Beam with Center-Point Loading).
9. ASTM C404 - Standard Specification for Aggregates for Masonry Grout.

B. American Welding Society (AWS):
1. AWS D1.4 - Structural Welding Code - Reinforcing Steel.

1.3 SUBMITTALS

A. Product Data: Submit product standards, physical and chemical characteristics, technical specifications, limitations, maintenance instructions, and general recommendations regarding each material.

B. Manufacturer's Instructions: Submit manufacturer's instructions for preparation, mixing, placing, and curing.

1.4 CLOSEOUT SUBMITTALS

A. Project Record Documents: Accurately record actual locations and quantities of structural repairs.

© 2014 – Graef-USA, Inc.

B. Operation and Maintenance Data: Procedures for submittals.

1.5 QUALIFICATIONS

A. Manufacturer: Company specializing in manufacturing products specified in this section with minimum five (5) years documented experience.

B. Contractor: Company specializing in concrete repair with minimum five (5) years documented experience and approved by manufacturer.

1.6 DELIVERY, STORAGE, AND HANDLING

A. Comply with instructions for storage, shelf life limitations, and handling.

1.7 EXISTING CONDITIONS

A. Conduct demolition to minimize interference with adjacent building areas. Maintain protected egress and access at all times.

B. Provide, erect, and maintain temporary barriers and security devices.

PART 2 PRODUCTS

2.1 CEMENTITIOUS MORTAR MATERIALS

A. Manufacturers:
1. The Euclid Chemical Company:
   a. Product(s): Eucopatch, Verticoat, or Duraltop Flowable Mortar.
2. Sika Corporation:
   a. Product(s): Sikatop 111 Plus, Sikatop 122 Plus, or Sikatop 123 Plus.
3. BASF Corporation:
   a. Product(s): S66 CI, S88 CI, SD2, or HBA.
4. Substitutions: As approved by Engineer.

2.2 REINFORCEMENT MATERIALS

A. Reinforcing Steel: ASTM A615, 60 ksi yield grade billet-steel deformed bars, epoxy coated finish.

PART 3 EXECUTION

3.1 EXAMINATION

A. Verify surfaces are ready to receive work.

B. Beginning of installation means acceptance of existing surfaces.

© 2014 – Graef-USA, Inc.

3.2 PREPARATION

A. Use hammers of 15 pounds or less for concrete removal.

B. Remove concrete in an area extending slightly beyond outer boundary of unsound concrete.

C. Edges of removed area shall not be feathered, but shall be sawed to a minimum depth of 3/4-inch for topside spall repairs.

D. Edges of underside and vertical spalls shall be sawed to a minimum depth of 1/2-inch when prepackaged patching material is used.

E. During removals, care shall be exercised to avoid damaging exposed steel, breaking its bond to surrounding concrete, and/or cracking adjacent sound concrete.

F. Pneumatic tools should not be placed in direct contact with reinforcing steel.

G. Contractor shall be responsible for the labor and material costs to replace reinforcement or to provide supplemental reinforcement when excessive damage to existing reinforcement is caused by careless operation of Contractor's tools.

H. If a reinforcing bar is exposed for half its diameter or more or if its bond to adjacent concrete is broken, then remaining concrete around bar shall be removed to provide a minimum clearance of 3/4-inch between bar and concrete.

I. Exposed reinforcing and exposed fractured concrete surface shall be thoroughly cleaned by abrasive blasting.

J. Engineer shall be sole judge as to whether a bar has lost its bond or whether it is damaged enough to require replacement or supplemental steel.

K. As a precautionary safety measure, the area directly below areas being repaired shall be closed until concrete demolition work is completed.

3.3 APPLICATION - CEMENTITIOUS MORTAR

A. Provide a Saturated Surface Dry (SSD) surface if required by product manufacturer.

B. Apply brush coating of slurry mix to damp concrete surfaces. Provide full surface coverage.

C. Apply cementitious mortar by steel trowel to fill patch area in accordance with manufacturer's instructions.

D. Damp cure cementitious mortar for two (2) days.

© 2014 – Graef-USA, Inc.

3.4 CLEAN-UP

A. Remove demolished materials from site as work progresses. Upon completion of work, leave areas of work in clean condition.

B. Debris shall not be flushed down the existing floor drains.

END OF SECTION

© 2014 – Graef-USA, Inc.

Discussion #1

Discussion #1

ENGINEERING DIVISION
SHELLY BILLINGSLEY, P.E.
CITY ENGINEER

PARK DIVISION
JEFF WARNOCK
SUPERINTENDENT

FLEET MAINTENANCE
MAURO LENCI
SUPERINTENDENT

STREET DIVISION
JOHN H. PRIJIC
SUPERINTENDENT

WASTE DIVISION
ROCKY BEDNAR
SUPERINTENDENT

DEPARTMENT OF PUBLIC WORKS
MICHAEL M. LEMENS, P.E., DIRECTOR
SHELLY BILLINGSLEY, P.E., DEPUTY DIRECTOR

MUNICIPAL BUILDING · 625 - 52ND ST · RM 305 · KENOSHA, WI 53140
TELEPHONE (262) 653-4050 · FAX (262) 653-4056
EMAIL PUBLICWORKS@KENOSHA.ORG

July 11, 2014

To: Rocco LaMacchia, Sr., Chairman
Public Safety & Welfare

From: Shelly Billingsley, P.E. Shelly Billingsley
Deputy Director of Public Works / City Engineer

Cc: Scott Gordon
District 11

Subject: ***INFORMATIONAL ITEM - Update on Fire Station #4***

BACKGROUND INFORMATION

Staff has been informed that the contractor has been mobilized to the site and construction will begin.

RECOMMENDATION

Informational Only – No Action Needed